ANT1 LB+N78

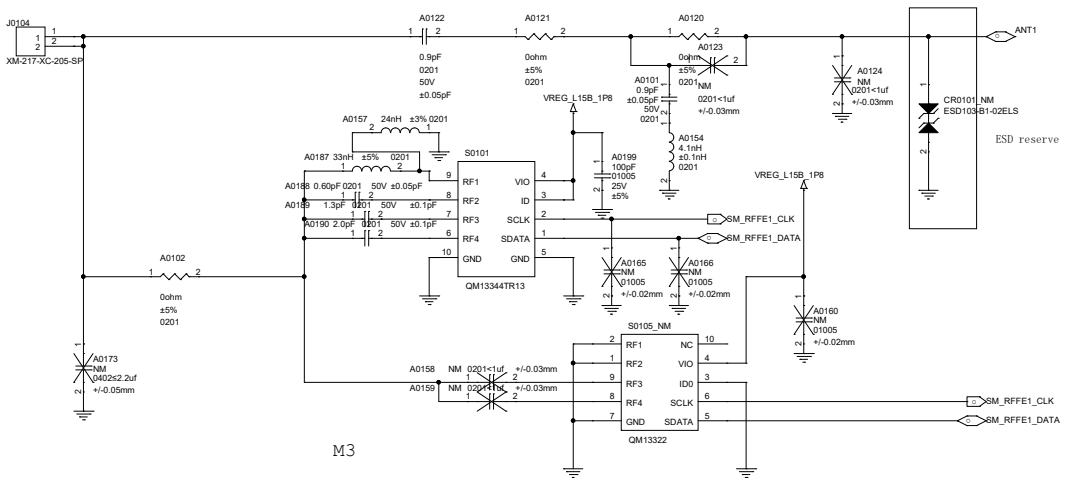

ANT4 MHB

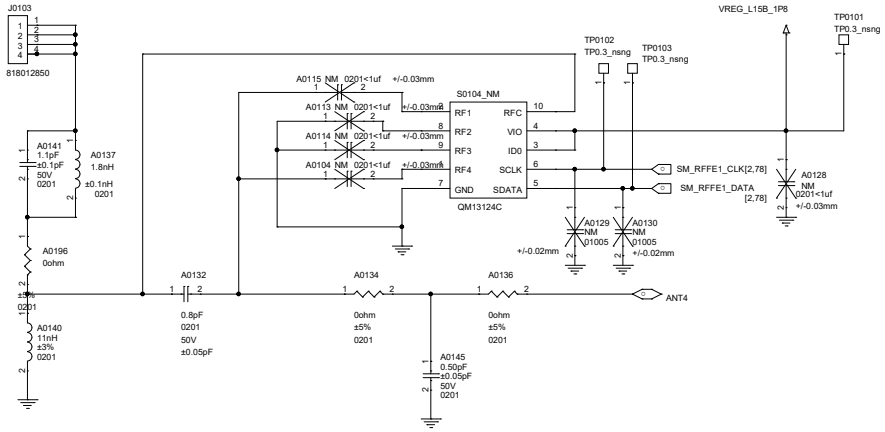

ANT6 M3 MHB+B32 M2A MHB

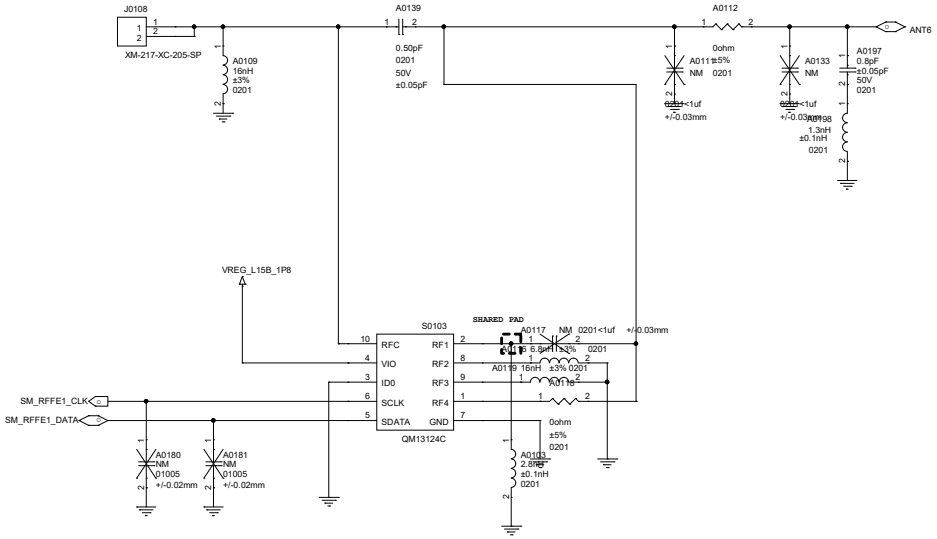

ANT10 N78

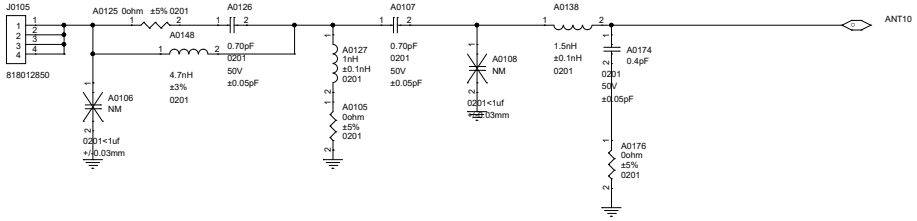

MAIN PCB GND

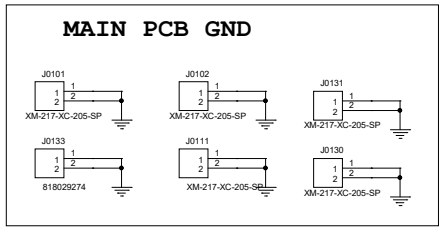

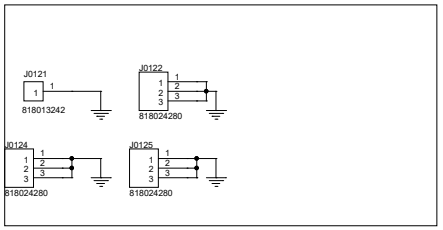

SAR SENSOR2

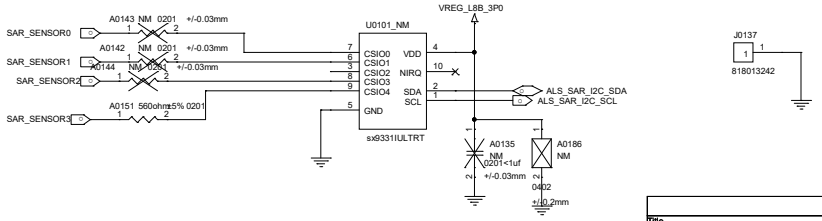

Title	M3_MAIN	
Size A2	Document Number CONTENT	Rev P0
Date: Thursday, September 15, 2022	Sheet	

ANT18 M3 WIFI2.4G+WIFI6E CH3

ANT15 GPS B32+L1+WIFI2.4 CHAIN0

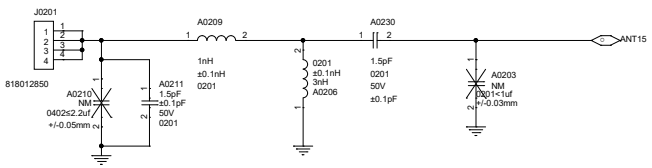

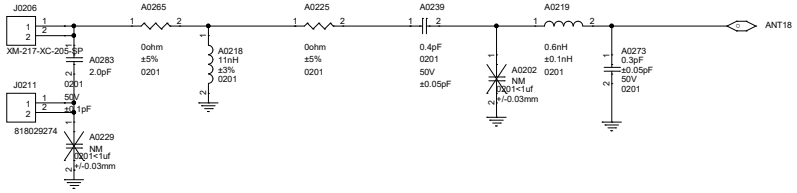

M3

ANT2 LB3 + B32

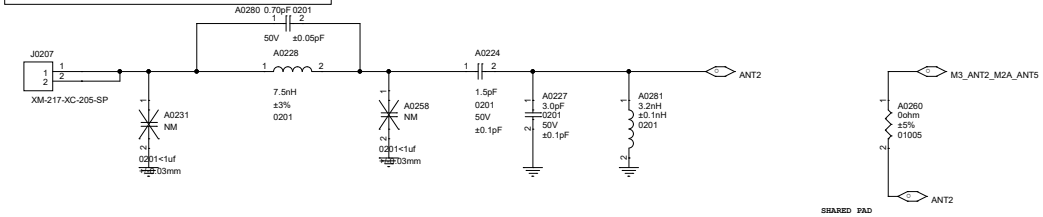

ANT19 GPS L5

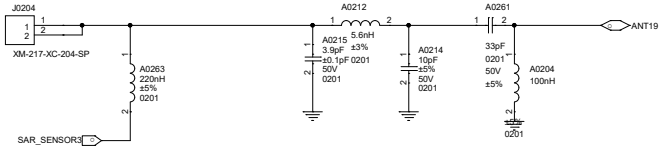

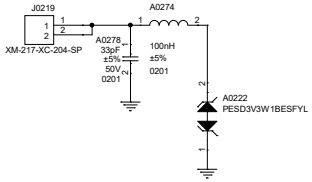

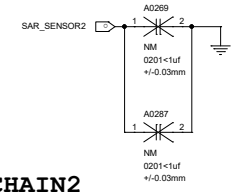

ANT17 M3 WIFI 6E CHAIN2
M2A WIFI 5G CHAIN2

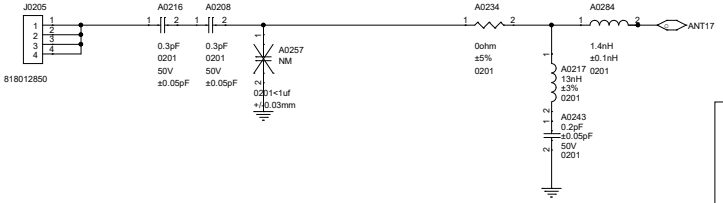

ANT12 N41+N78

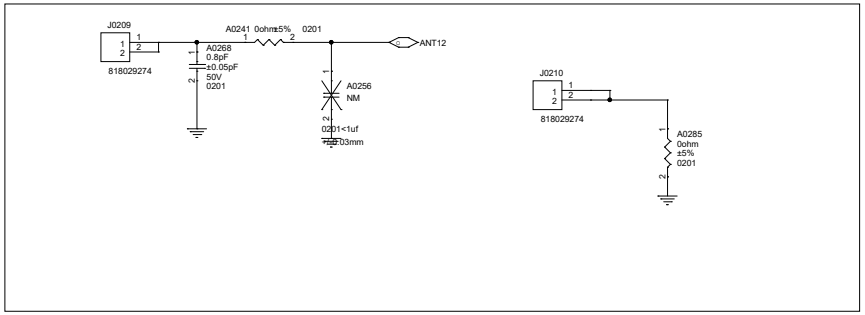

Title	M3_MAIN	
Size A2	Document Number ANT2	Rev P0
Date: Thursday, September 15, 2022	Sheet 2 of 79	

ANT0
GLB
LB_TRX
CN
LB_TRX
N41 NSA DRX

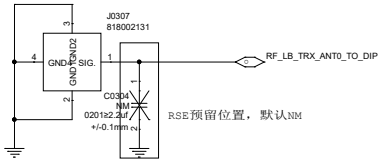

ANT1
LB DRX
N77/78 DRX

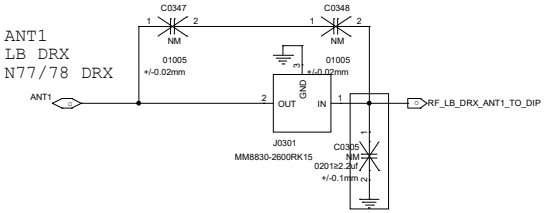

ANT4
GLB
MHB PM
N1/N3/N40/N41/N66 TRX

CN
MHB PM
N1/N3/N40/N41 PM
N41 NSA TRX;

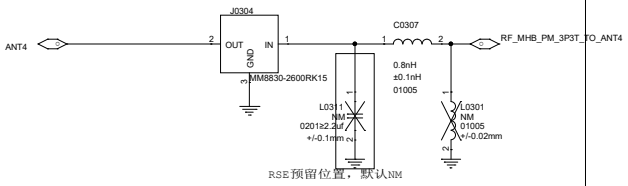

ANT3
GLB
MHB TRX
N1/N3/N40/N41/N66 PM
N78 DM
CN
MHB TRX
N1/N3/N40/N41 TRX
N78 DM

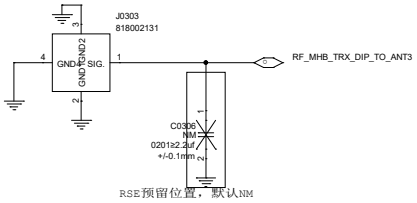

ANT6
GLB
LTE MHB DRX
N1/3/40/41/66 DM
NSA N41 DM
B32 PRX;
CN
LTE MHB DRX
N1/3/40/41 DRX
NSA N41 DM

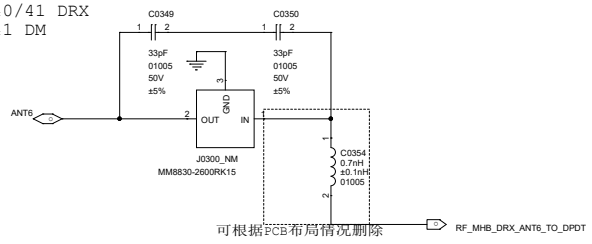

ANT10
n77/n78 TRX

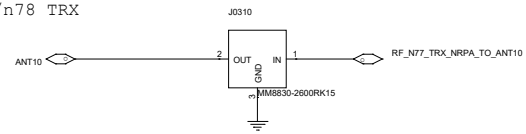

ANT12
n77/n78 PM

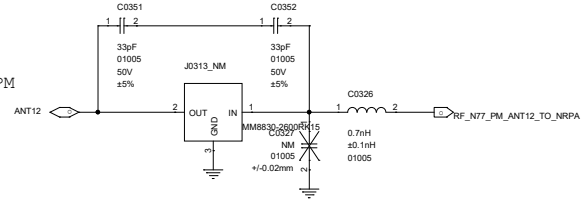

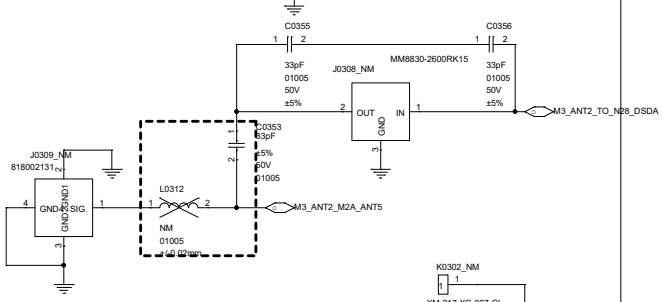

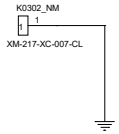

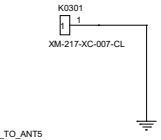

ANT5
GLB
B32 DRX
B20 TRX IN B20+N28;
CN
LB B28 DSDA;

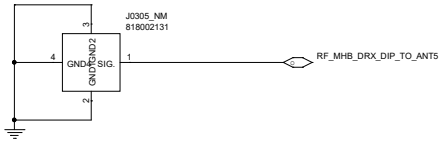

WIFI+GPS

ANT15 GPS B32+L1+WIFI2.4 CHAIN0

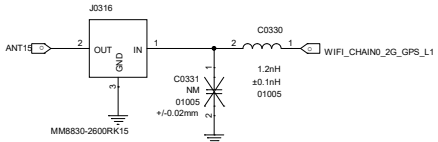

ANT17 WIFI 6E CHAIN2

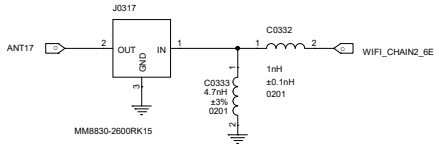

ANT18
WIFI2.4G+WIFI6E CH3

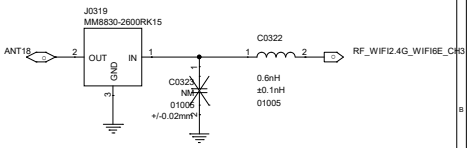

Title	M3_MAIN	
Size A2	Document Number RF CONN	Rev P0
Date: Thursday, September 15, 2022	Sheet 3	79

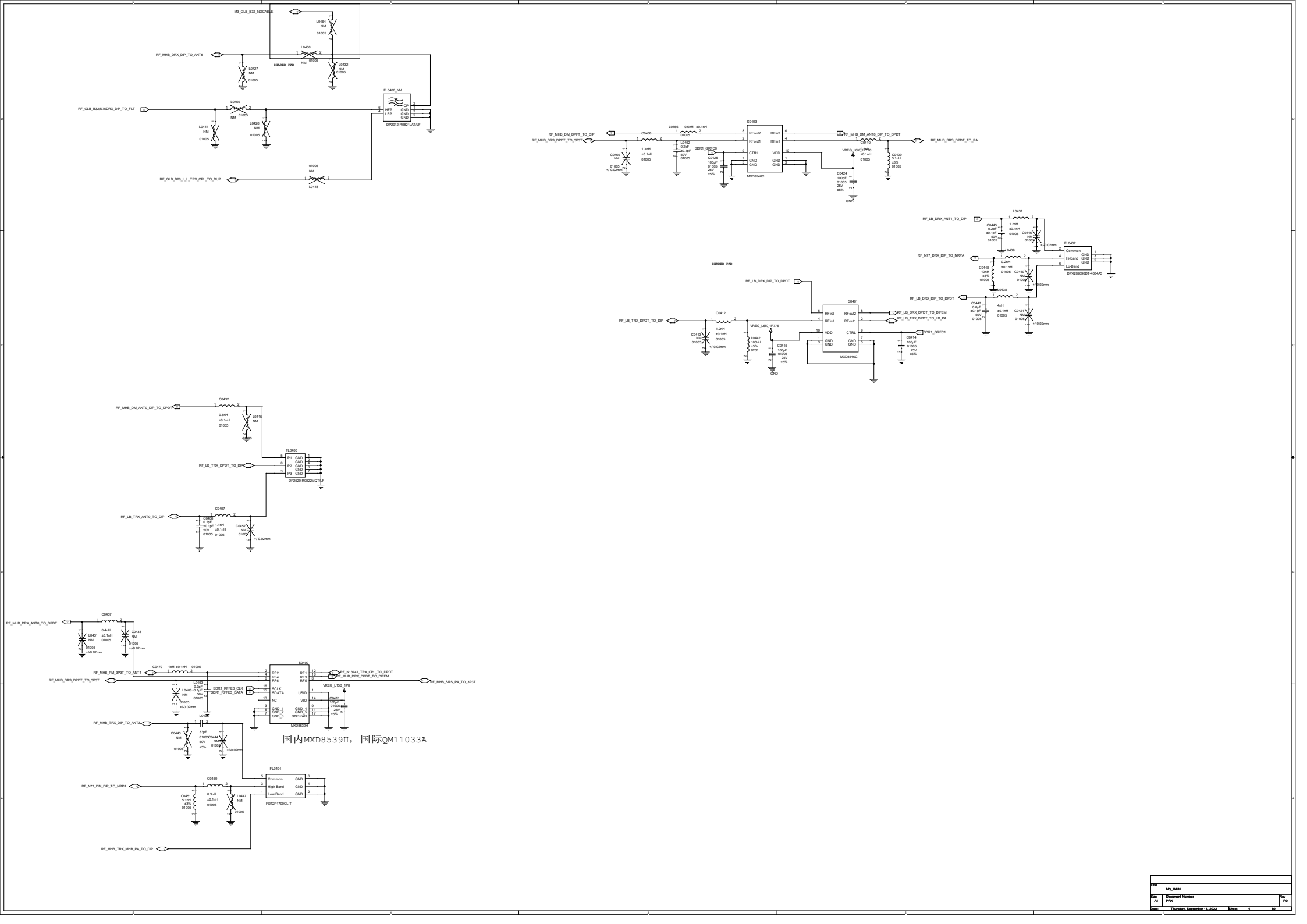

File:	M3_MAIN		
Size: A1	Document Number: PR0		Rev: P0
Date: Thursday, September 15, 2022	Sheet 4 of 20		

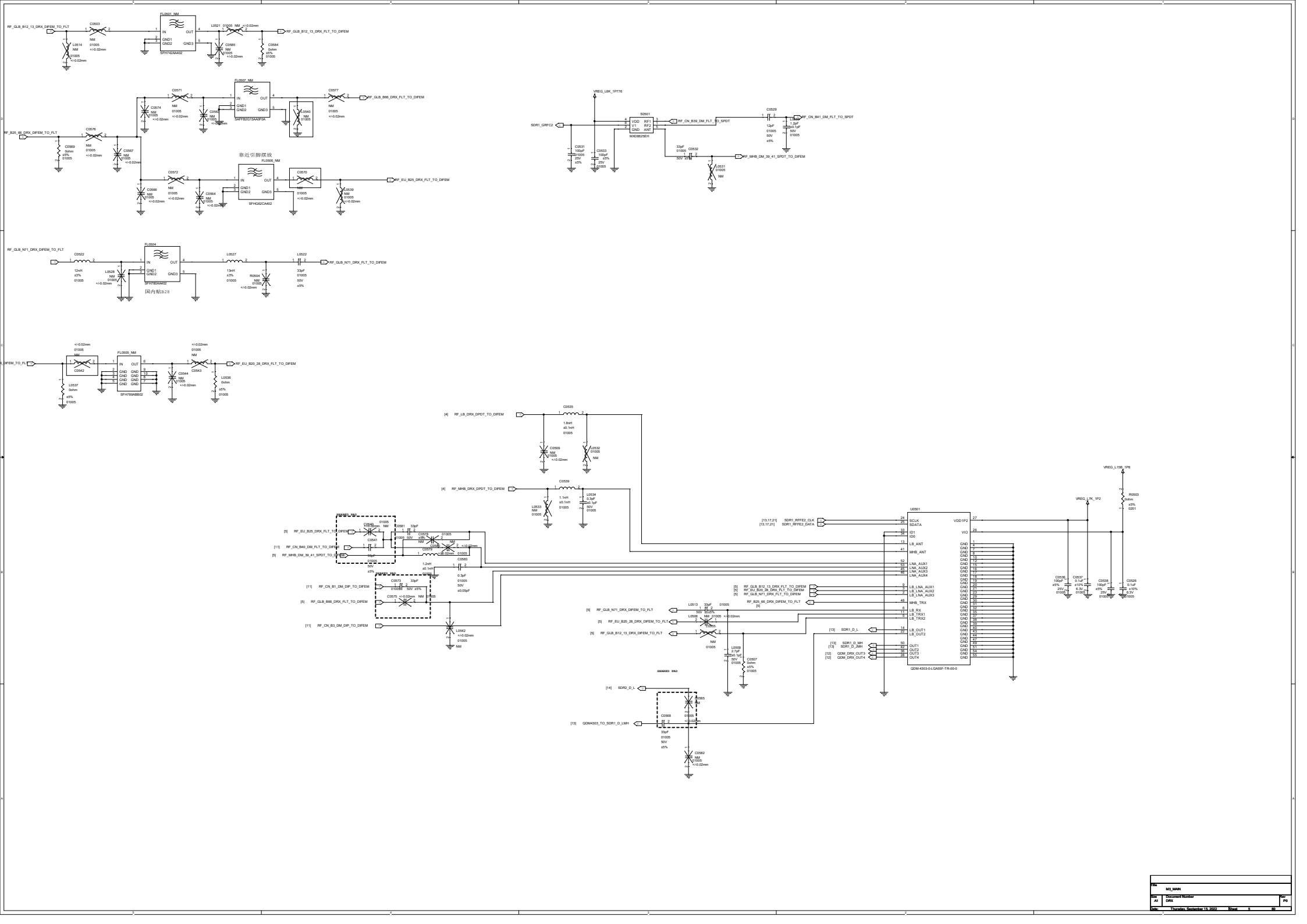

File:	M3_MAIN		
Size: A1	Document Number: DRX		Rev: P0
Date: Thursday, September 15, 2022	Sheet 5 of 80		

LB TAS DPDT

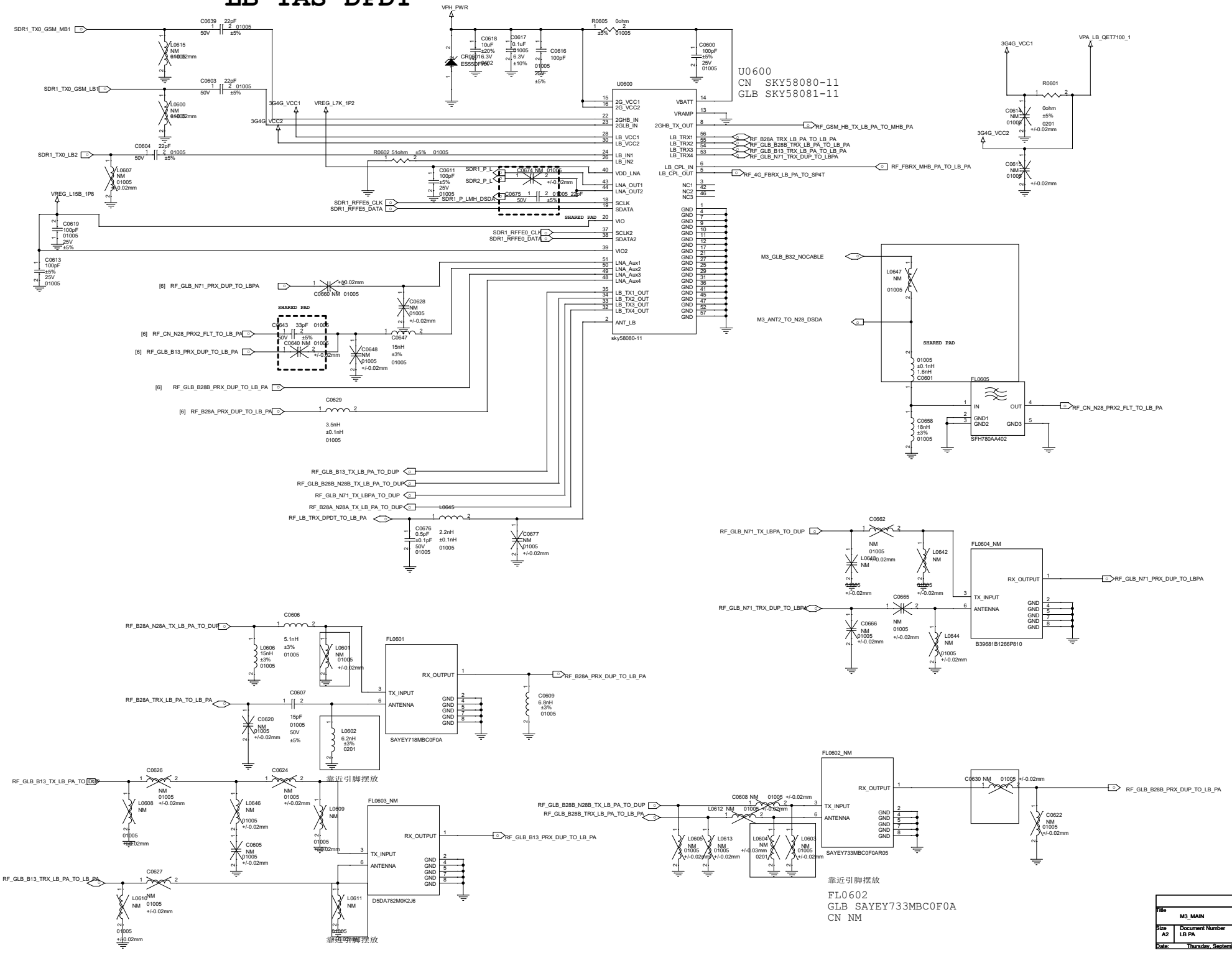

Title	M3_MAIN	
Size A2	Document Number LB PA	Rev P0
Date: Thursday, September 15, 2022	Sheet 6	80

MHB S-PAD

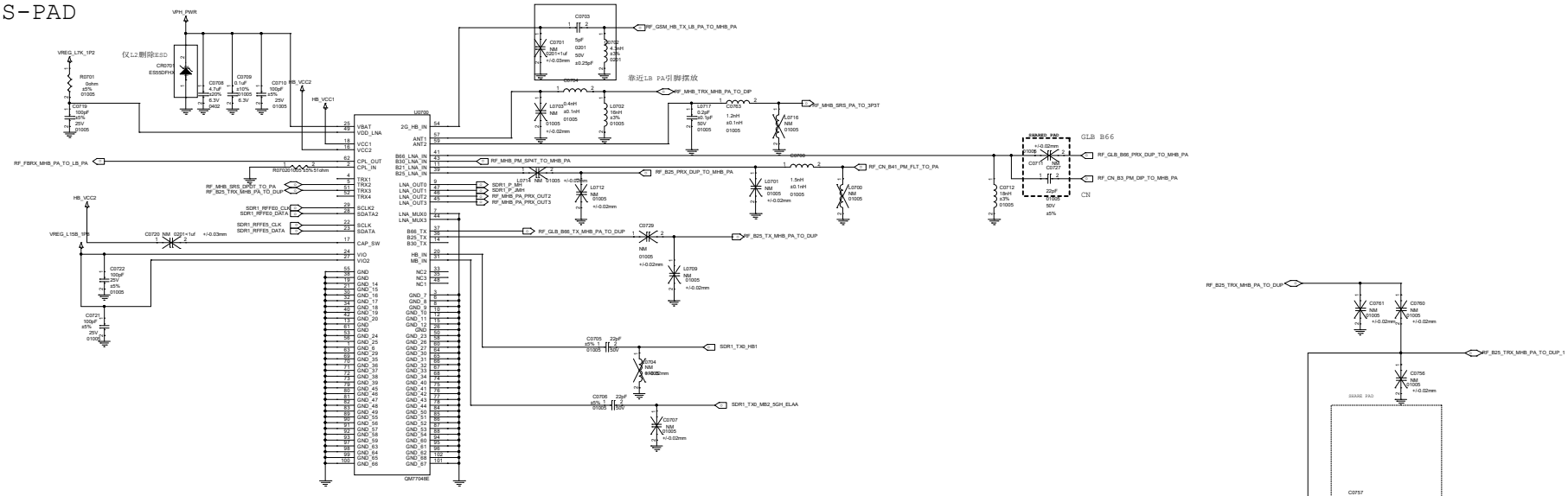

CN QM77048E
EU QM77048B

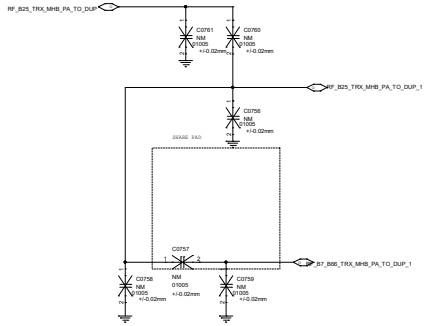

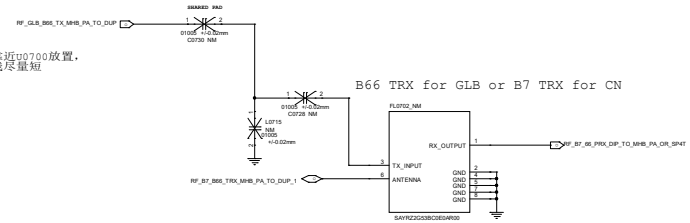

FL0702靠近U0700放置，
兼容走线尽量短

B66 TRX for GLB or B7 TRX for CN

CN_B7
SAYRZ2G53BC0E0AR00
GLB_B66
SAYAV1G74BA1E0A

B25 TRX for GLB or B2 TRX for CN

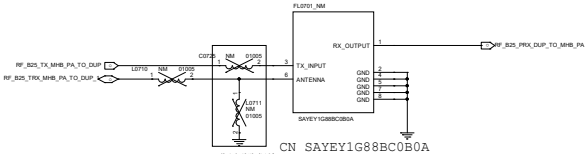

靠近引脚摆放

CN SAYEY1G88BC0B0A
EU SAYPE1G88BA1G0A

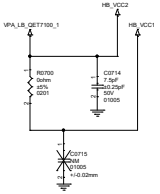

File:	M3_MAIN		
Size: A1	Document Number: MHB PA		Rev: P0
Date: Thursday, September 15, 2022		Sheet	

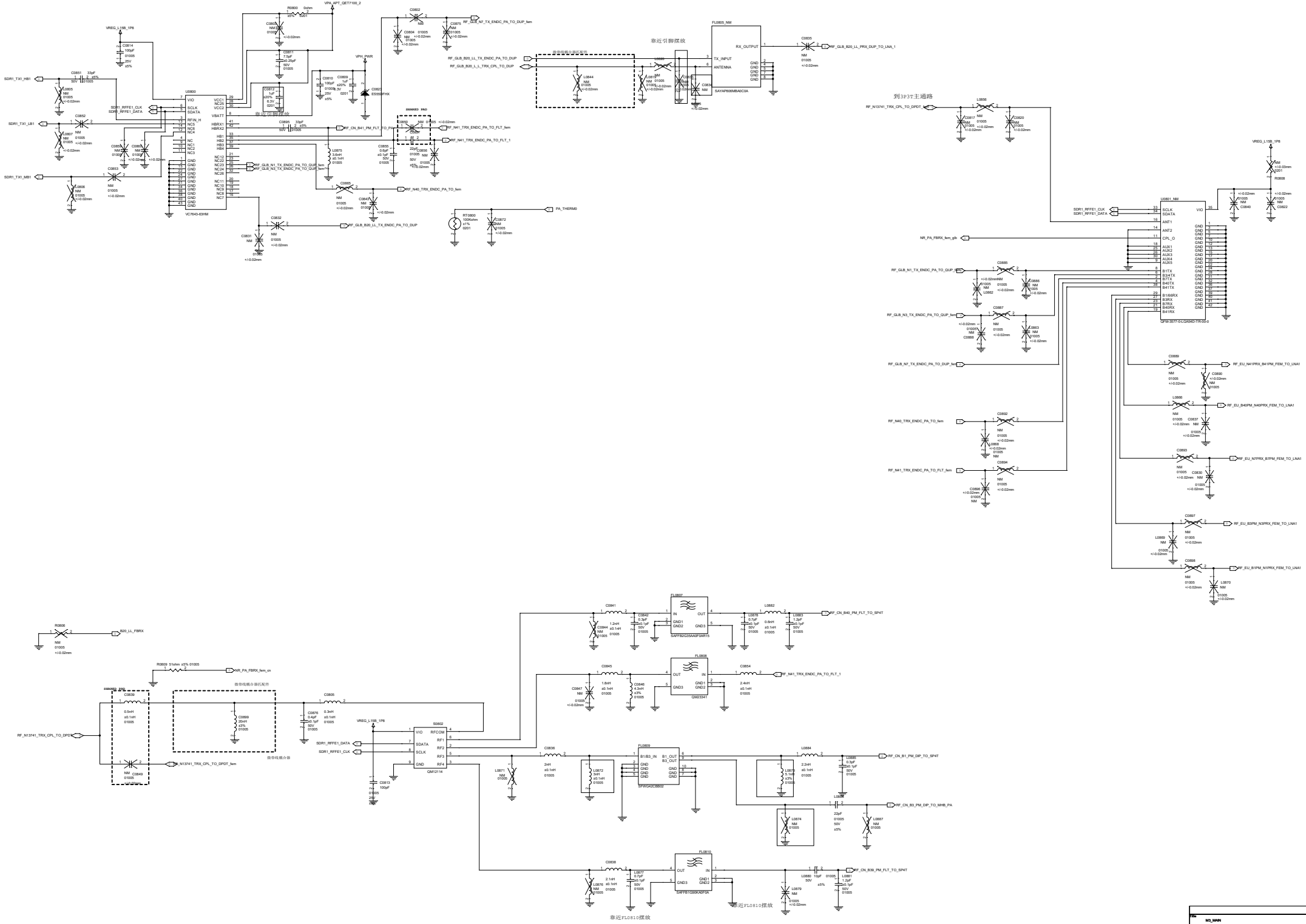
U0800
VC7643-63HM
靠近引脚摆放
FL0805_NM
SAYAF805MBA0C0A
RX_OUTPUT
TX_INPUT
ANTENNA
到3P3T主通路
U0801_NM
SFM-3577-0-LGA54D-TR-00-0
FL0807
SAFFB2G35AA0F0AR15
FL0808
QMZ3341
FL0809
SFWG4GCBB02
FL0810
SAFFB1G90KA0F0A
S0802
QM12114
靠近FL0810摆放
Date: Thursday, September 15, 2022
Sheet 8 of 80

QET7100_1

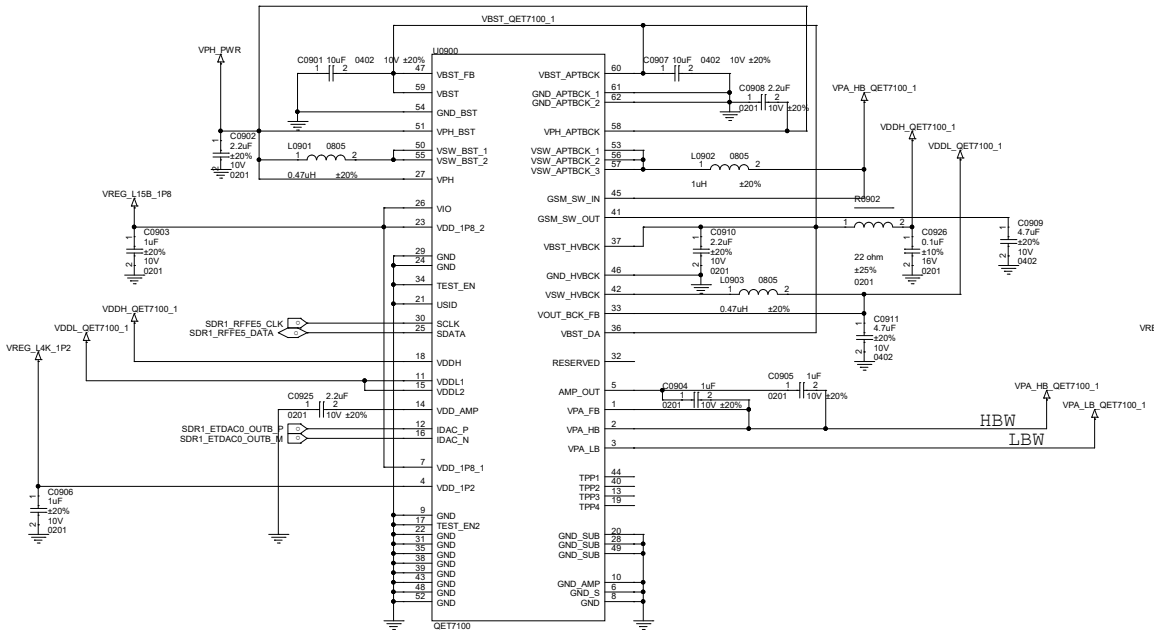

QET7100_2

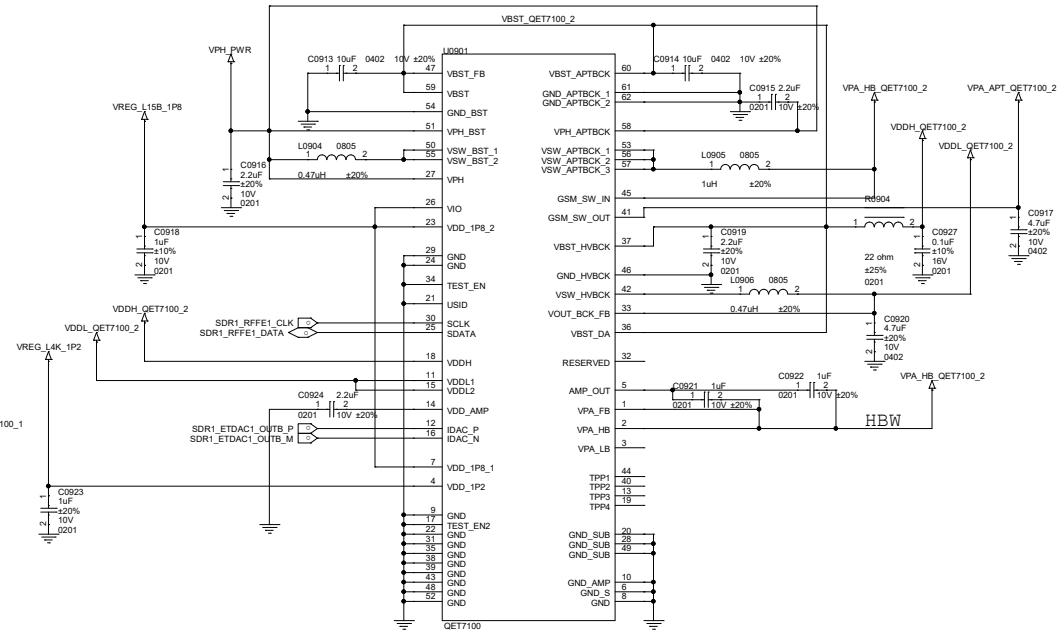

Title	M3_MAIN		
Size A2	Document Number RF DC-DC		Rev P0
Date:	Thursday, September 15, 2022	Sheet	

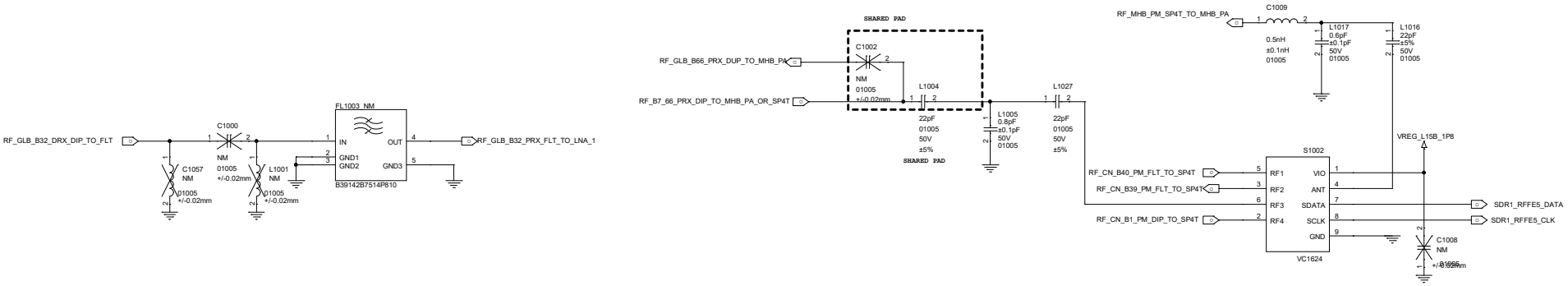

Title	M3_MAIN	
Size A2	Document Number PRX MIMO	Rev P0
Date: Thursday, September 15, 2022	Sheet	

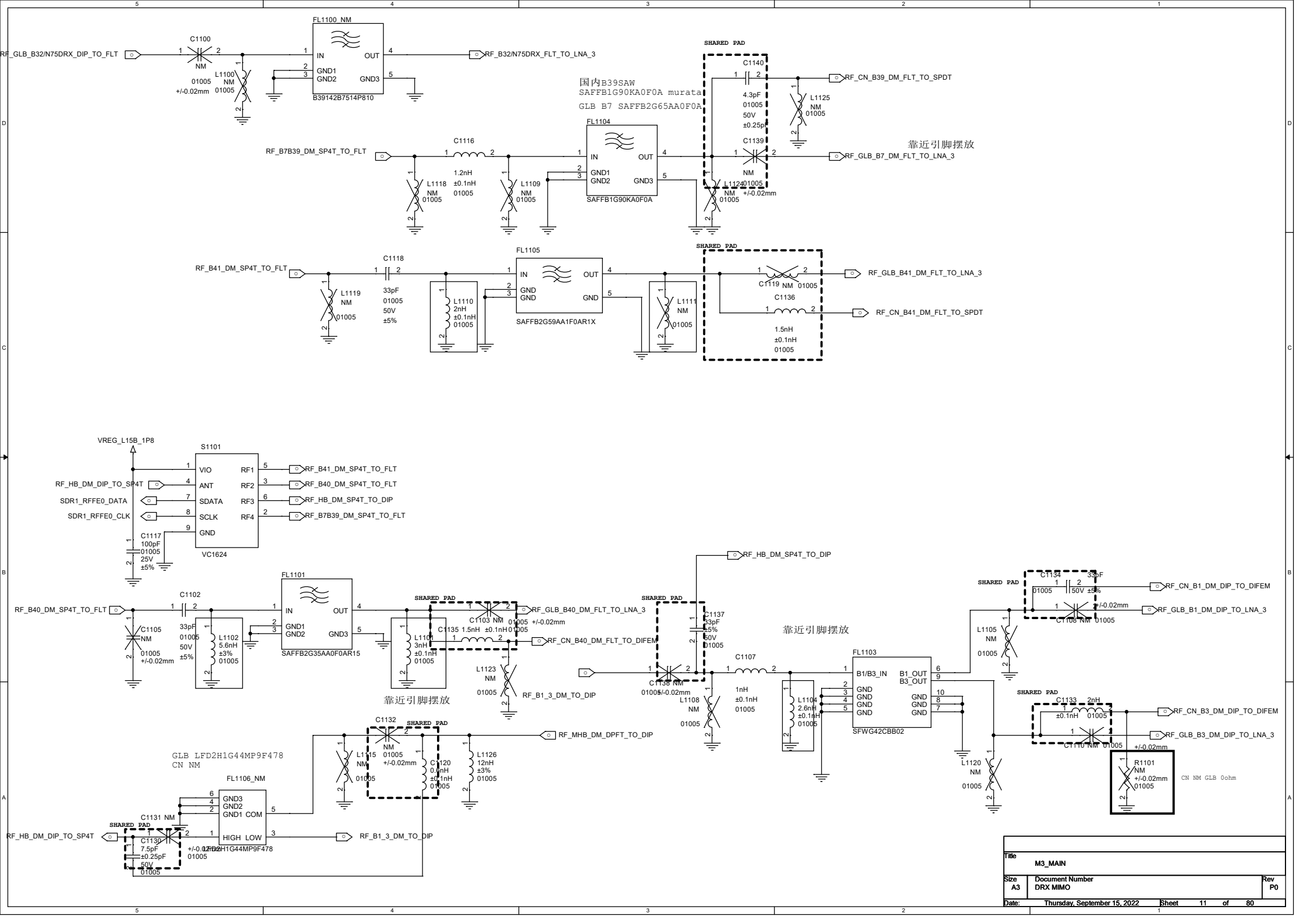
FL1100_NM
B39142B7514P810
RF_GLB_B32/N75DRX_DIP_TO_FLT
RF_B32/N75DRX_FLT_TO_LNA_3
C1100
NM
01005
+/-0.02mm
L1100
NM
01005
国内B39SAW
SAFFB1G90KA0F0A murata
GLB B7 SAFFB2G65AA0F0A
SHARED PAD
C1140
4.3pF
01005
50V
±0.25pF
RF_CN_B39_DM_FLT_TO_SPDT
L1125
NM
01005
FL1104
SAFFB1G90KA0F0A
RF_B7B39_DM_SP4T_TO_FLT
C1116
1.2nH
±0.1nH
01005
L1118
NM
01005
L1109
NM
01005
C1139
NM
L1124
01005
NM
+/-0.02mm
靠近引脚摆放
RF_GLB_B7_DM_FLT_TO_LNA_3
FL1105
SAFFB2G59AA1F0AR1X
RF_B41_DM_SP4T_TO_FLT
C1118
33pF
01005
50V
±5%
L1119
NM
01005
L1110
2nH
±0.1nH
01005
L1111
NM
01005
C1119
NM
01005
C1136
1.5nH
±0.1nH
01005
RF_GLB_B41_DM_FLT_TO_LNA_3
RF_CN_B41_DM_FLT_TO_SPDT
VREG_L15B_1P8
S1101
VC1624
VIO
ANT
SDATA
SCLK
GND
RF1
RF2
RF3
RF4
RF_HB_DM_DIP_TO_SP4T
SDR1_RFFE0_DATA
SDR1_RFFE0_CLK
RF_B41_DM_SP4T_TO_FLT
RF_B40_DM_SP4T_TO_FLT
RF_HB_DM_SP4T_TO_DIP
RF_B7B39_DM_SP4T_TO_FLT
C1117
100pF
01005
25V
±5%
FL1101
SAFFB2G35AA0F0AR15
RF_B40_DM_SP4T_TO_FLT
C1102
33pF
01005
50V
±5%
C1105
NM
01005
+/-0.02mm
L1102
5.6nH
±3%
01005
L1101
3nH
±0.1nH
01005
C1135
1.5nH
±0.1nH
01005
C1103
NM
01005
+/-0.02mm
RF_GLB_B40_DM_FLT_TO_LNA_3
RF_CN_B40_DM_FLT_TO_DIFEM
L1123
NM
01005
RF_B1_3_DM_TO_DIP
靠近引脚摆放
C1137
33pF
±5%
50V
01005
C1138
NM
01005
+/-0.02mm
L1108
NM
01005
C1107
1nH
±0.1nH
01005
靠近引脚摆放
FL1103
SFWG42CBB02
B1/B3_IN
B1_OUT
B3_OUT
GND
L1104
2.6nH
±0.1nH
01005
C1134
33pF
01005
50V
±5%
RF_CN_B1_DM_DIP_TO_DIFEM
C1108
NM
01005
+/-0.02mm
RF_GLB_B1_DM_DIP_TO_LNA_3
L1105
NM
01005
C1133
2nH
±0.1nH
01005
RF_CN_B3_DM_DIP_TO_DIFEM
C1110
NM
01005
+/-0.02mm
RF_GLB_B3_DM_DIP_TO_LNA_3
L1120
NM
01005
R1101
NM
+/-0.02mm
01005
CN NM GLB 0ohm
C1132
NM
01005
+/-0.02mm
RF_MHB_DM_DPFT_TO_DIP
L1115
NM
01005
C1120
0.6nH
±0.1nH
01005
L1126
12nH
±3%
01005
GLB LFD2H1G44MP9F478
CN NM
FL1106_NM
LFD2H1G44MP9F478
GND3
GND2
GND1 COM
HIGH LOW
C1131 NM
C1130
7.5pF
±0.25pF
50V
01005
+/-0.02mm
RF_HB_DM_DIP_TO_SP4T
RF_B1_3_DM_TO_DIP
Title
M3_MAIN
Size
A3
Document Number
DRX MIMO
Rev
P0
Date:
Thursday, September 15, 2022
Sheet
11
of
80

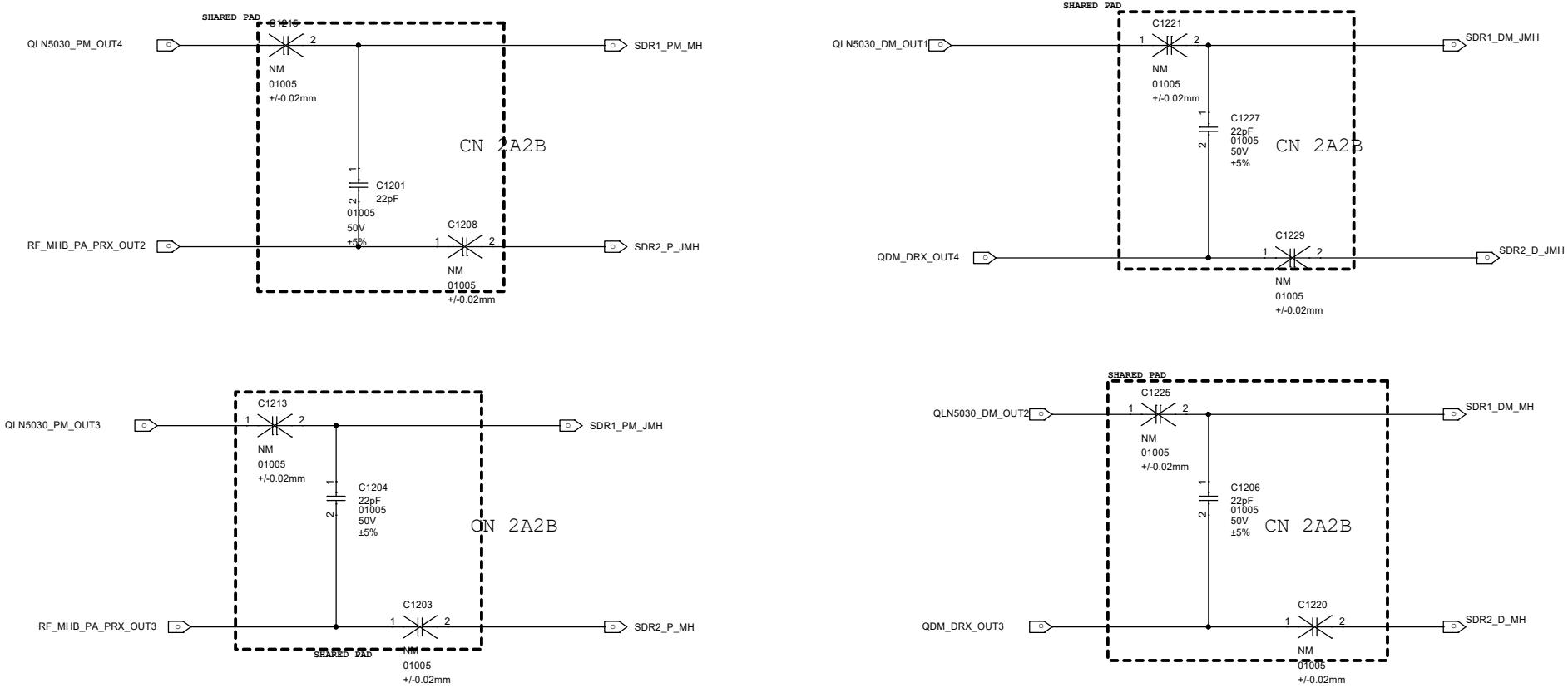

Title	M3_MAIN	
Size A3	Document Number Reserved(for LNA)	Rev P0
Date: Thursday, September 15, 2022	Sheet 12 of 80	

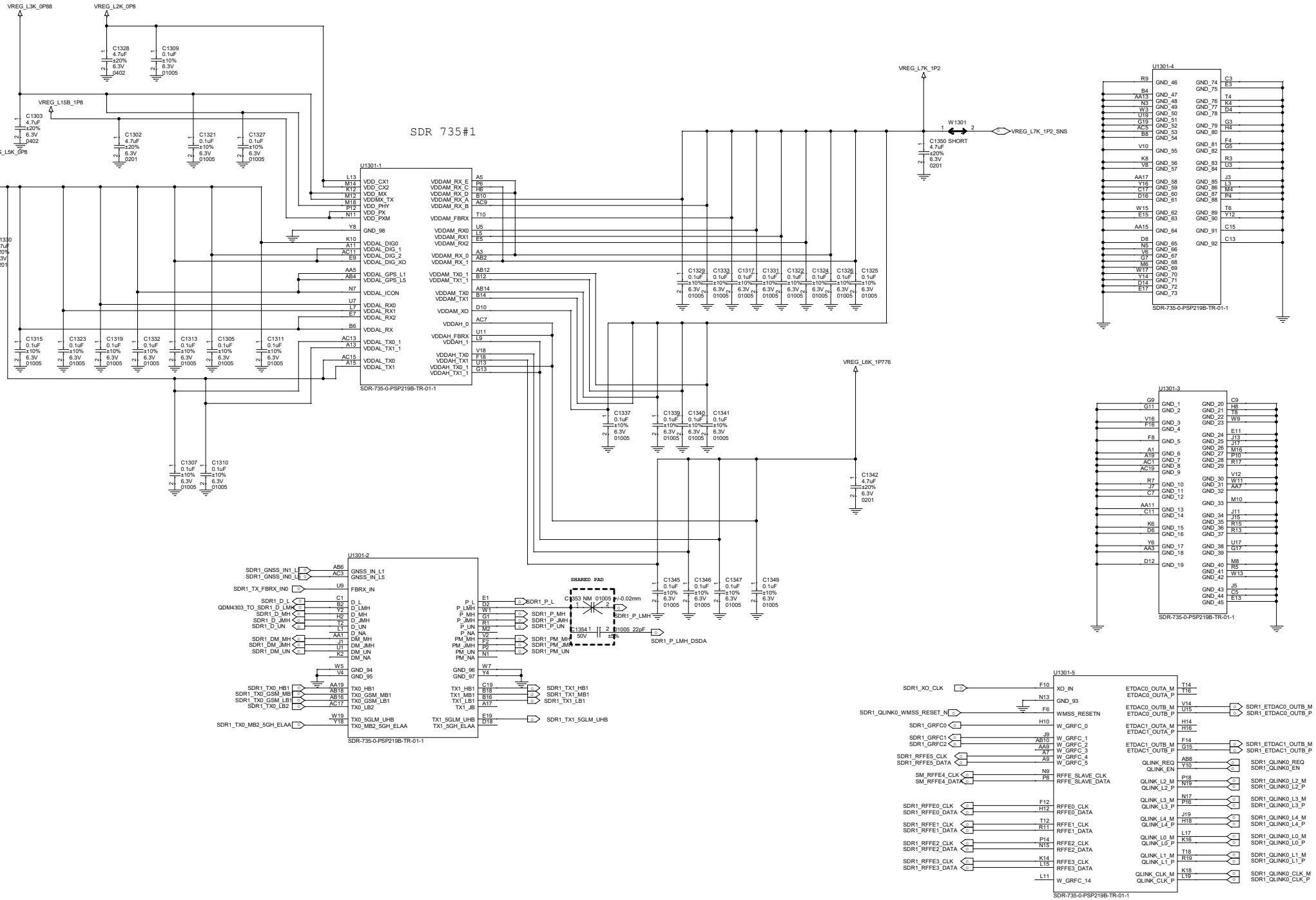

Title	M3_MAIN
Size A2	Document Number WTR SDM735-1
Rev	P0
Date:	Thursday, September 15, 2022
Sheet	

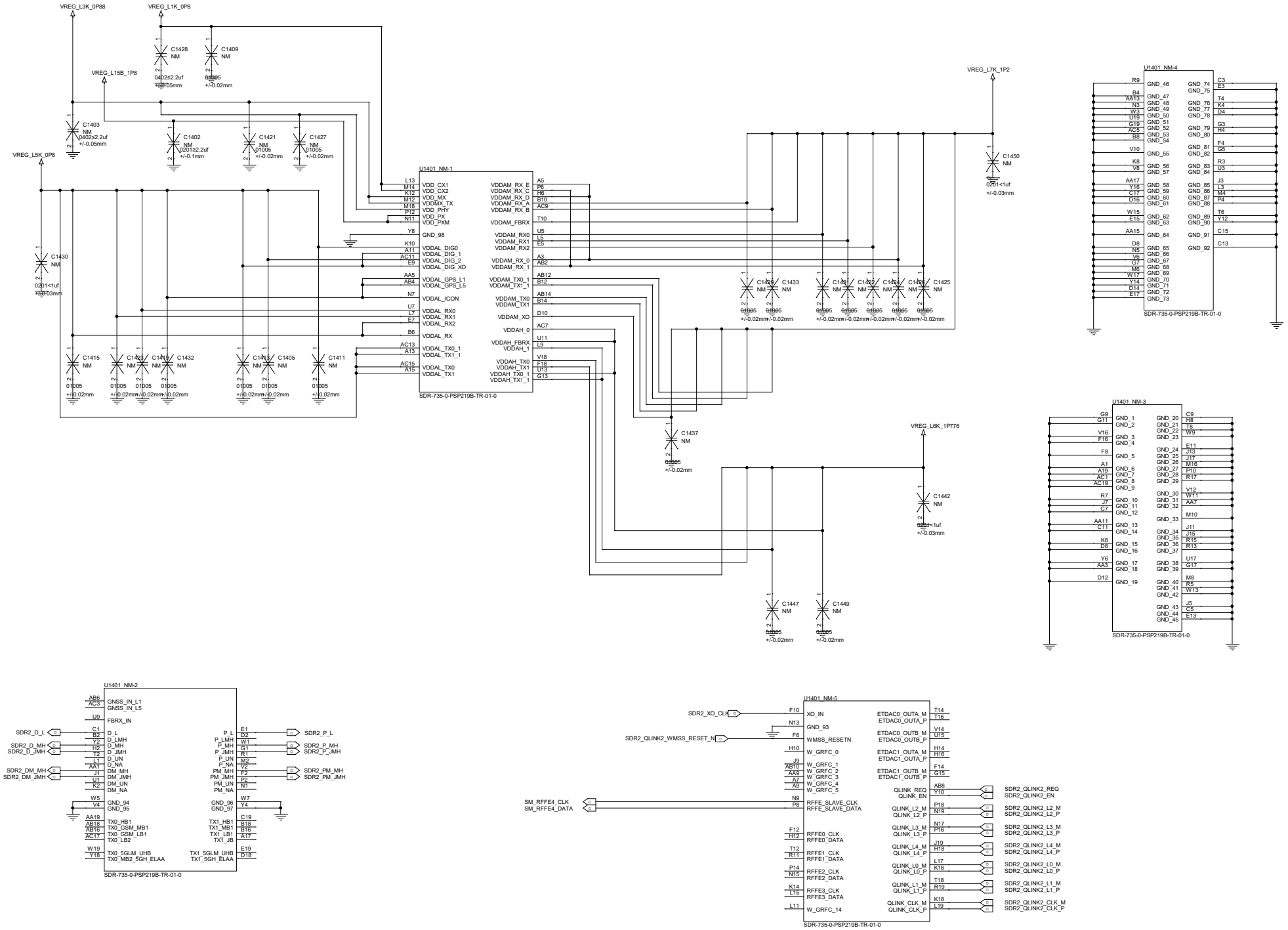

Title	M3_MAIN		
Size A2	Document Number WTR SDM735-2		Rev P0
Date: Thursday, September 15, 2022		Sheet	

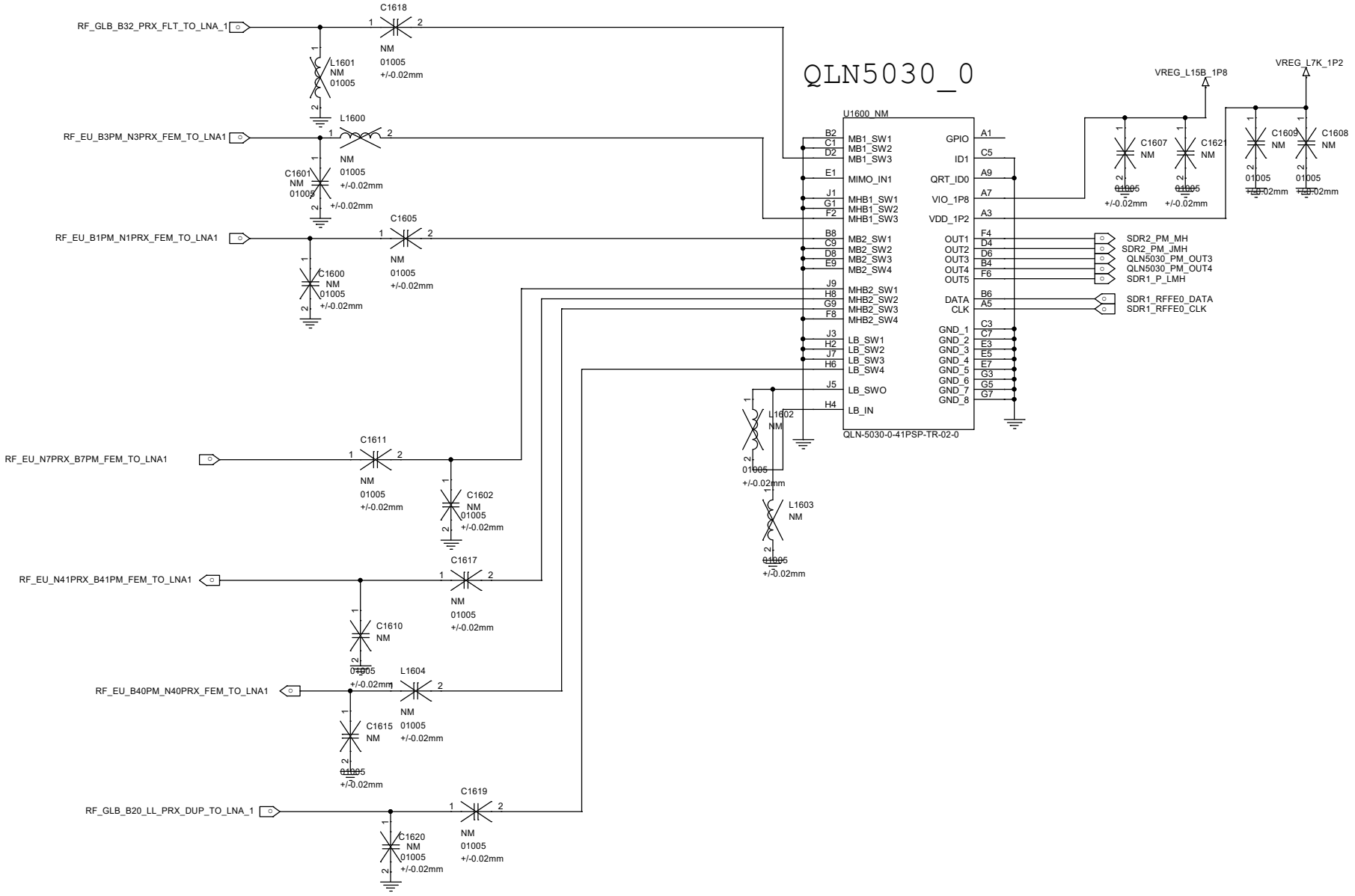

Title	M3_MAIN	
Size A3	Document Number Reserved(for 5G-sub 6G)	Rev P0
Date: Thursday, September 15, 2022	Sheet	

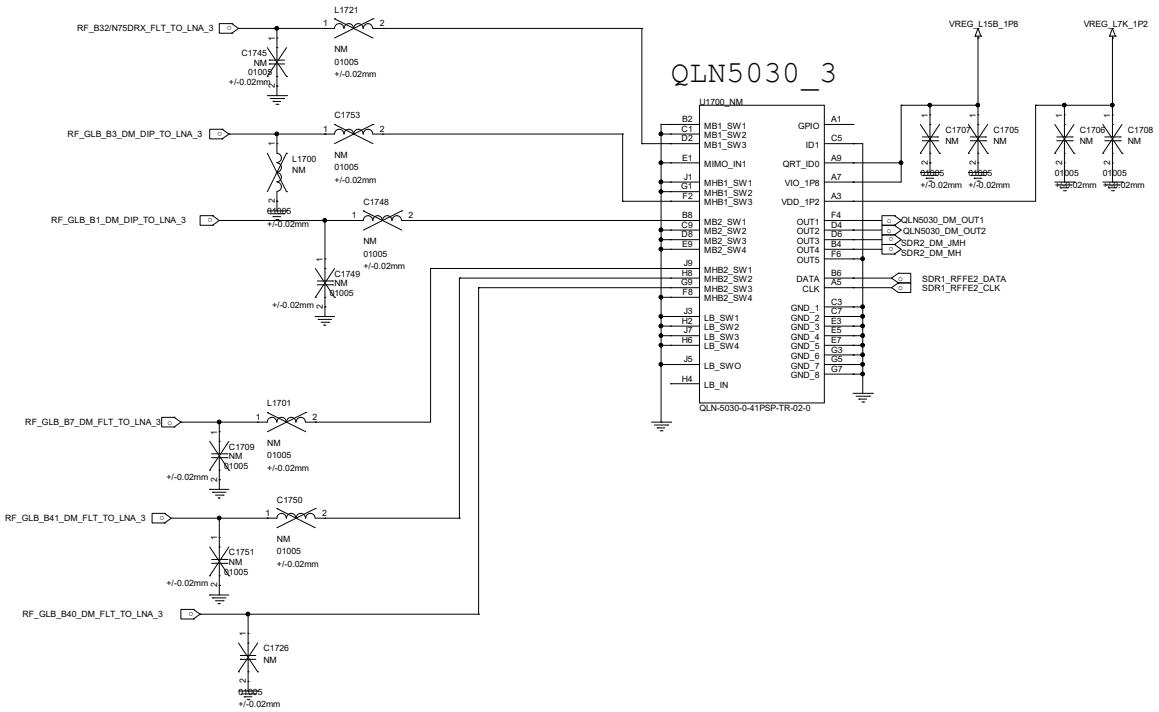

Title	M3_MAIN	
Size A2	Document Number Reserved(for MM Wave)	Rev P0
Date: Thursday, September 15, 2022	Sheet 17	80

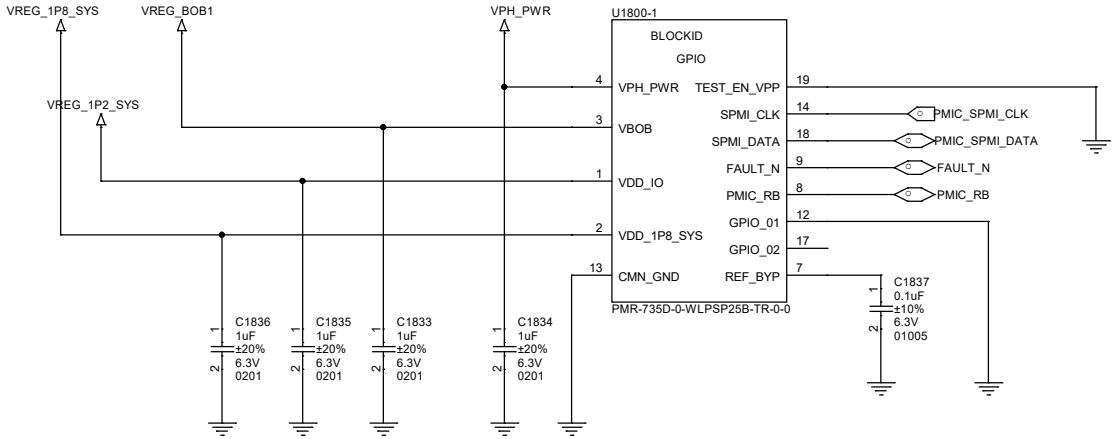

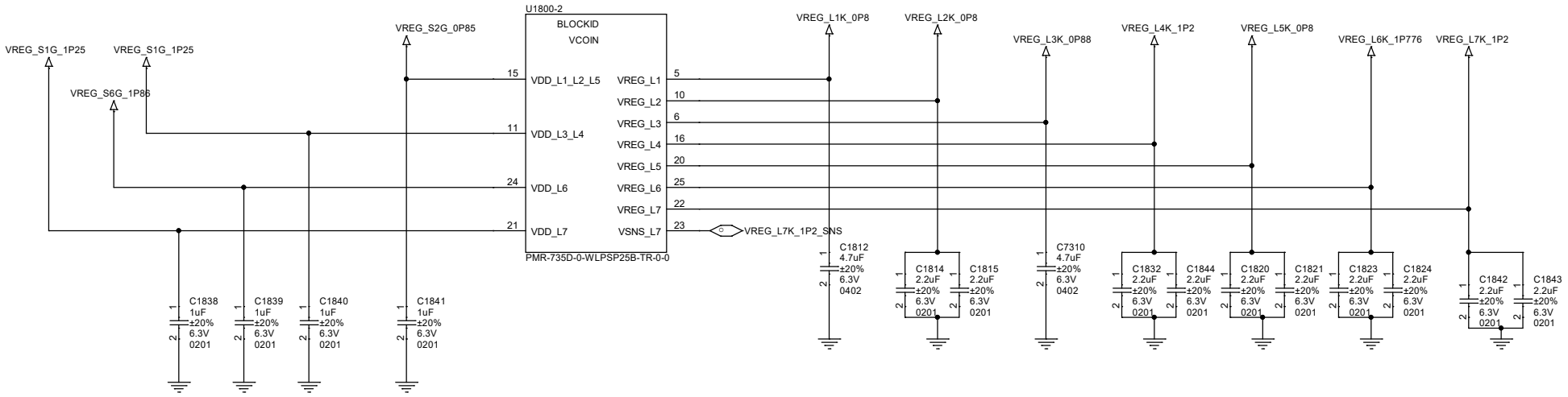

Title	M3_MAIN	
Size A3	Document Number PMR735A/PMR735B	Rev P0
Date: Thursday, September 15, 2022	Sheet	

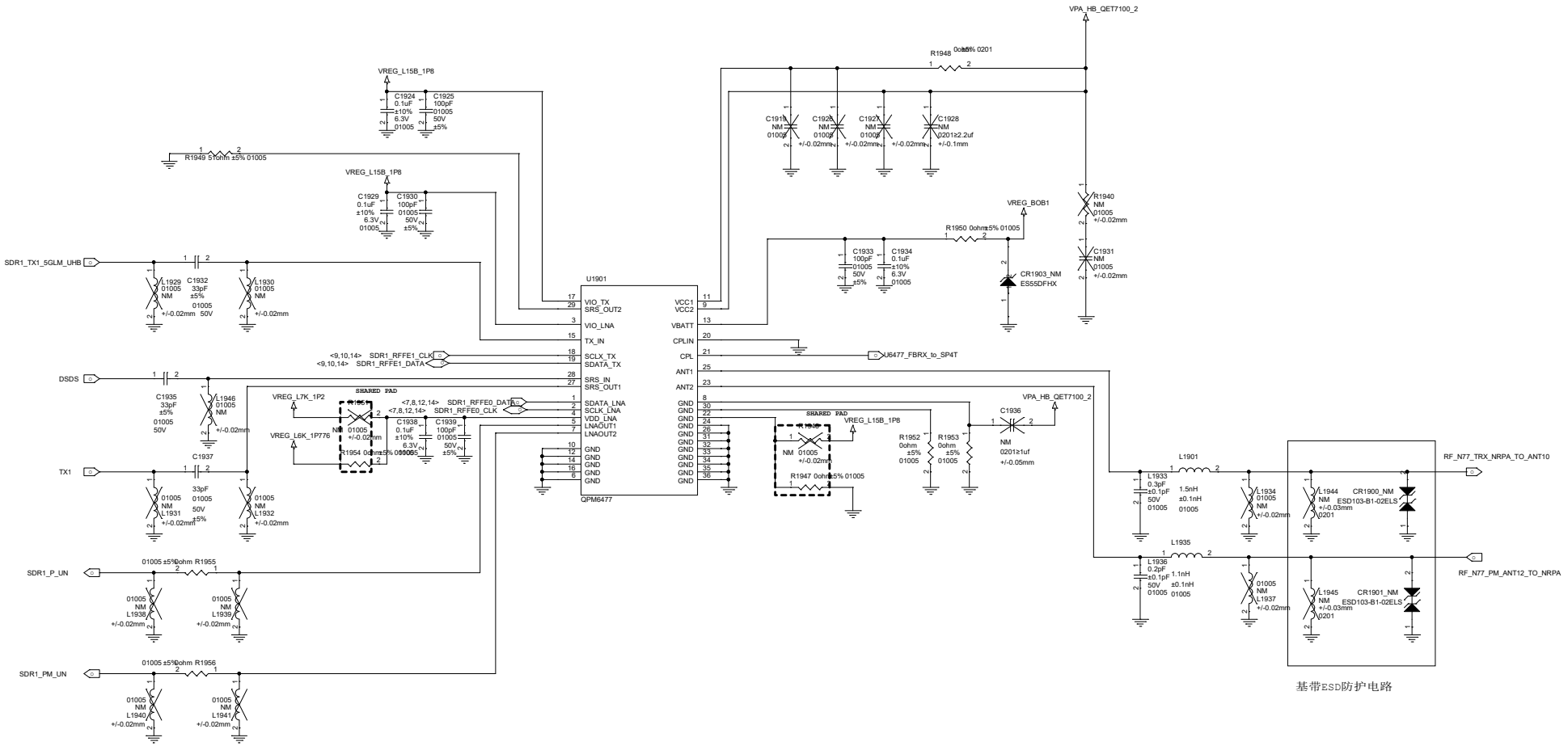

Title	M3_MAIN	
Size A2	Document Number 5G N77 N79	Rev P0
Date: Thursday, September 15, 2022	Sheet	

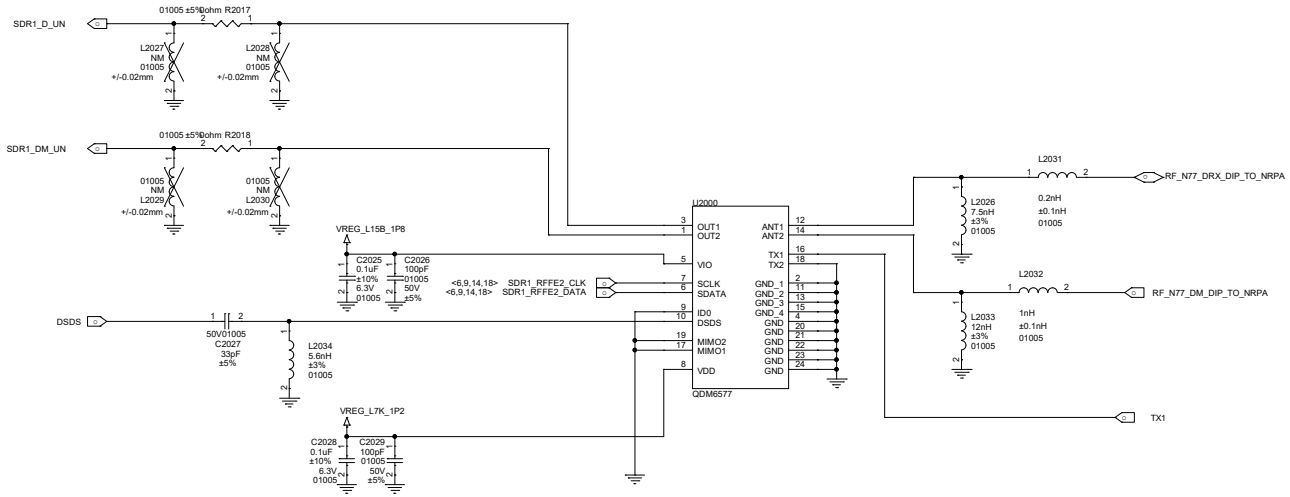

FBRX_SP4T

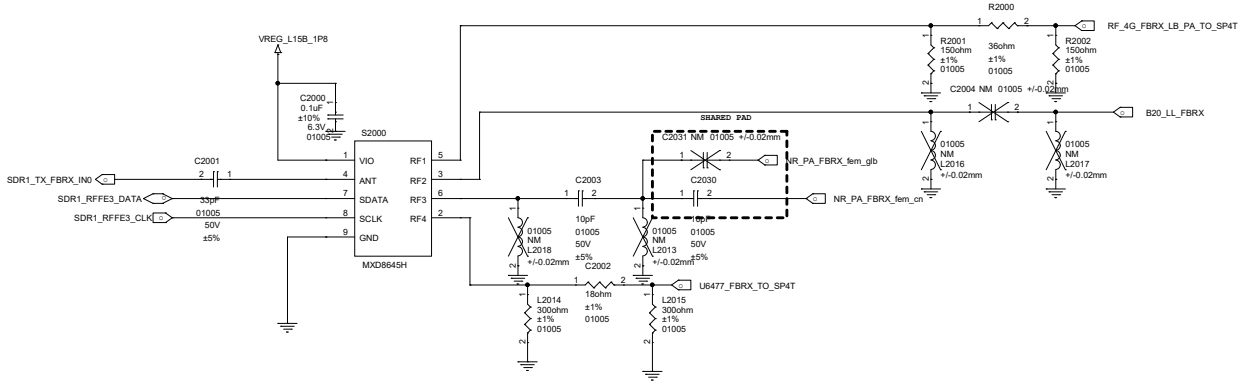

Title	M3_MAIN	
Size A2	Document Number Reserved(for 5G-sub 6G)	Rev P0
Date: Thursday, September 15, 2022	Sheet	

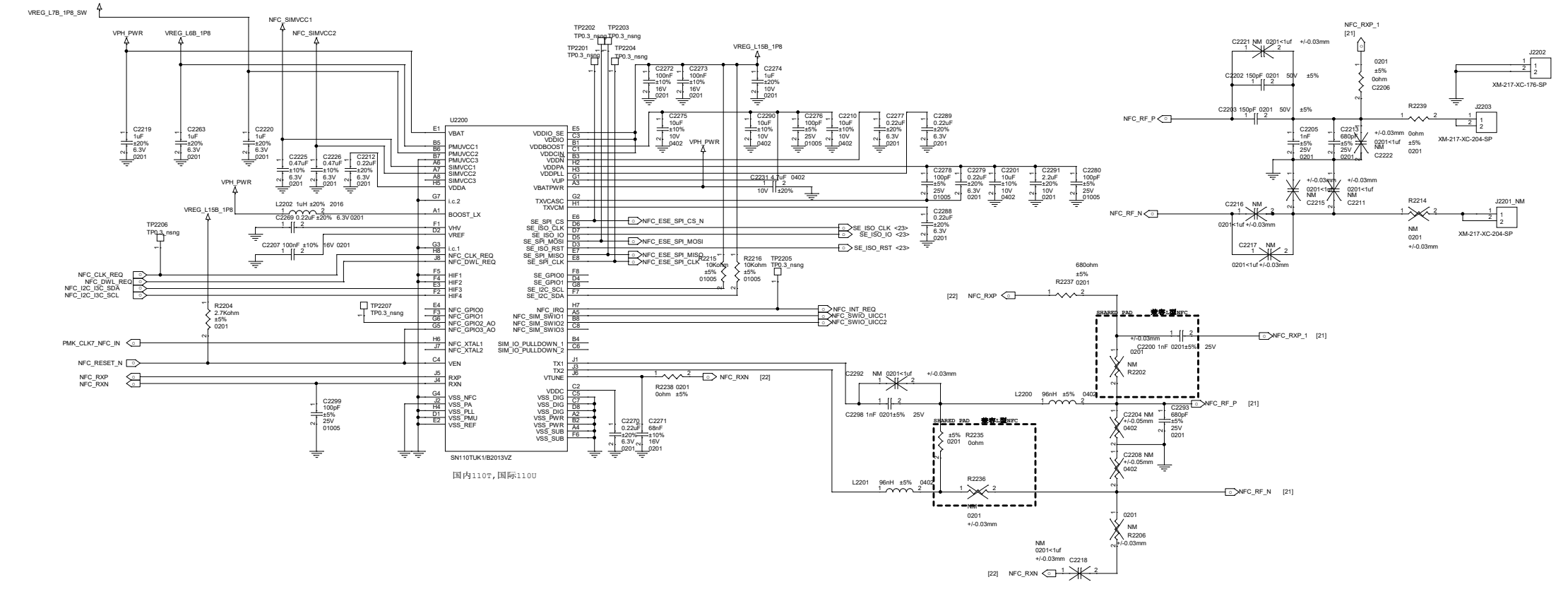

ESIM

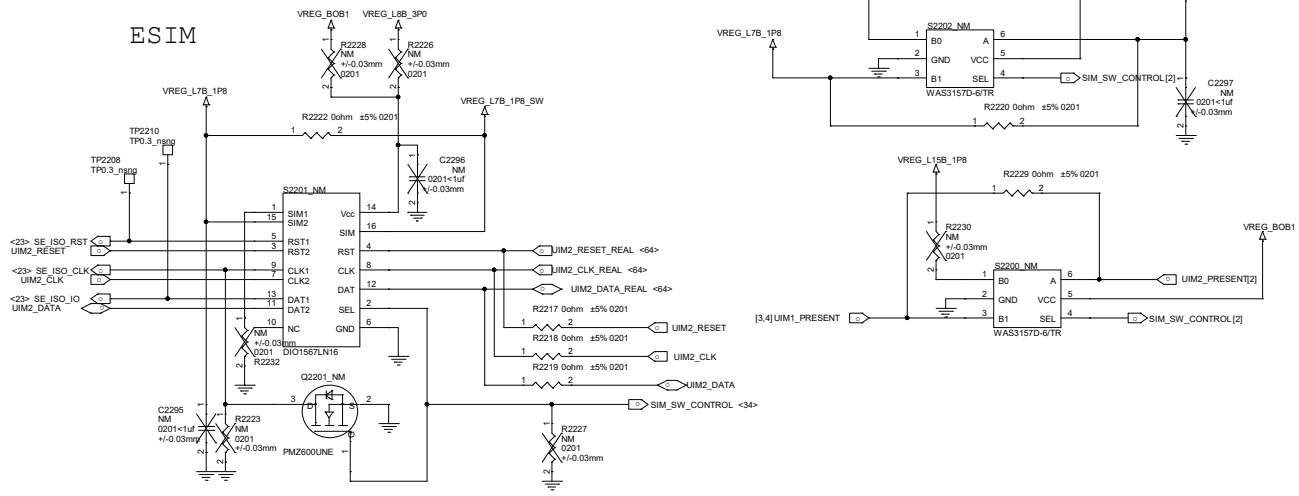

Title	M3_MAIN	
Size A2	Document Number NFC	Rev P0
Date: Thursday, September 15, 2022	Sheet 22	79

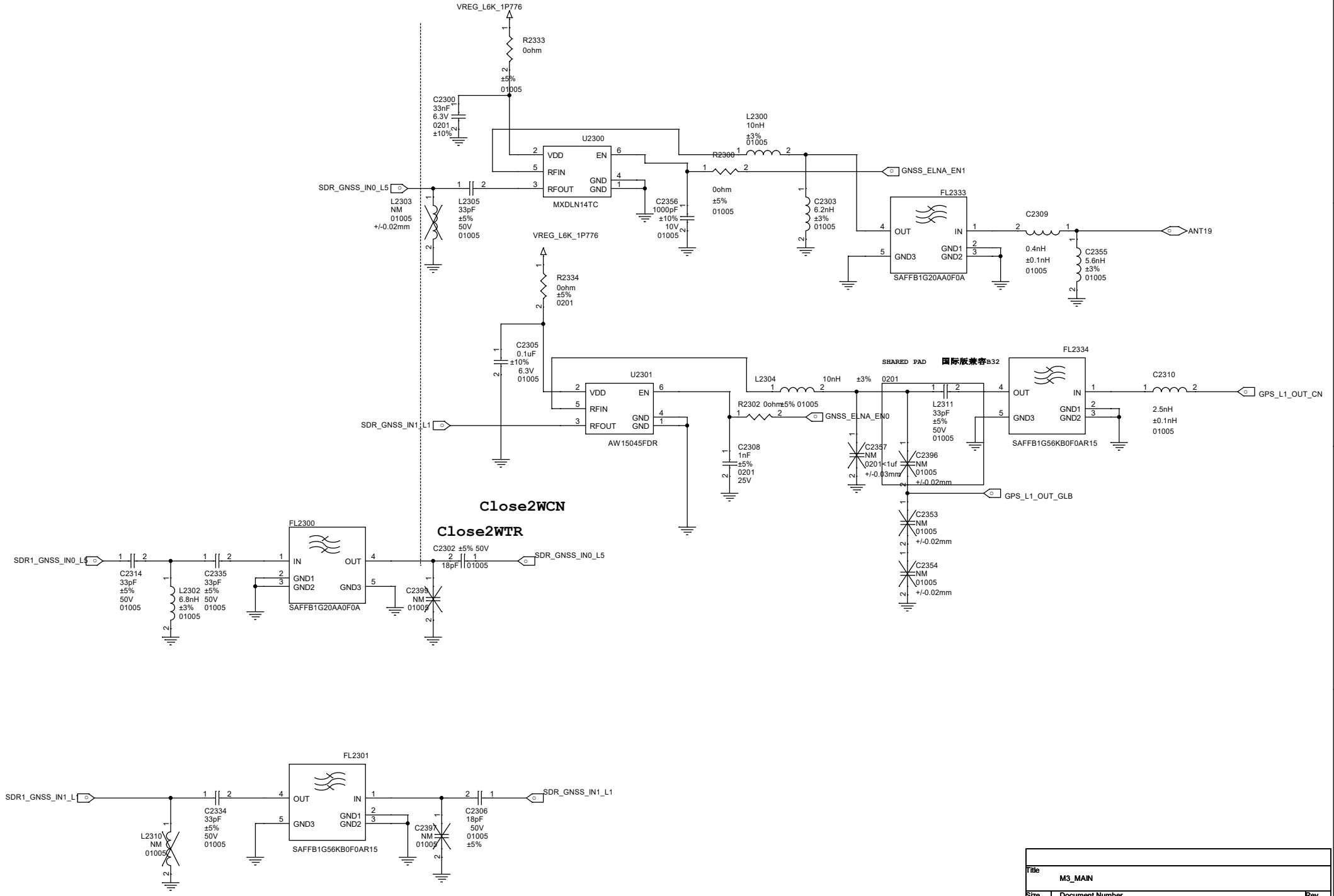

Title	M3_MAIN	
Size A3	Document Number GPS	Rev P0
Date: Thursday, September 15, 2022	Sheet 23 of 79	

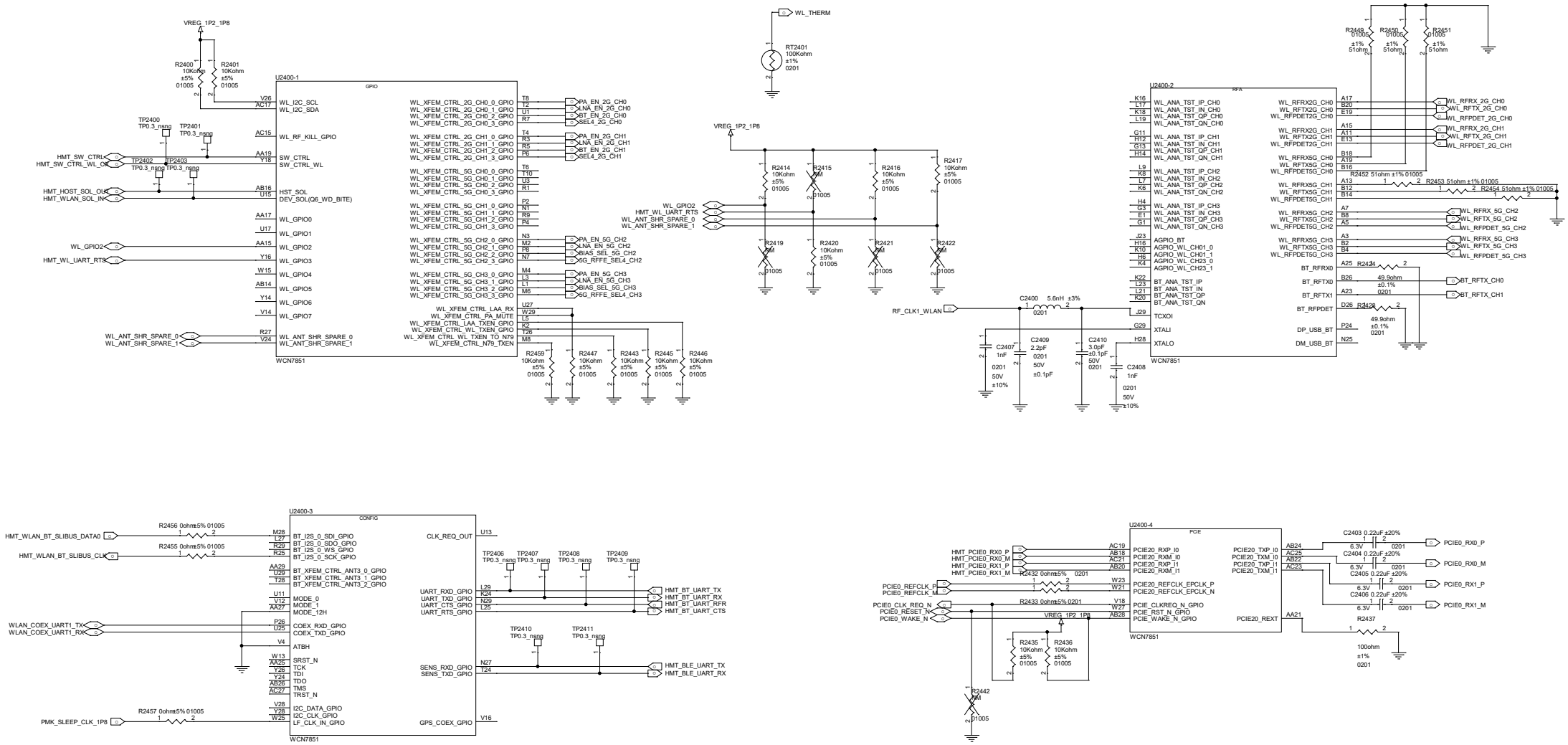

Title	M3_MAIN	
Size A2	Document Number WIFI Interface	Rev P0
Date: Thursday, September 15, 2022	Sheet 24	79

WIFI 2.4G CHAIN0

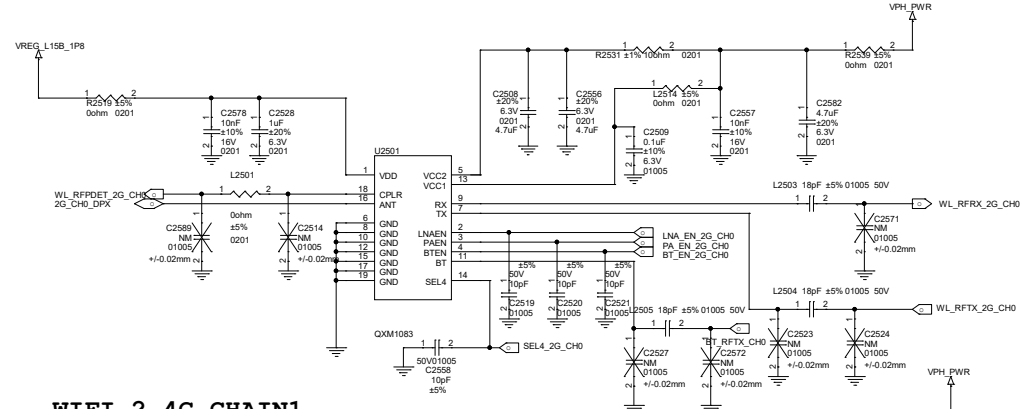

WIFI 2.4G CHAIN1

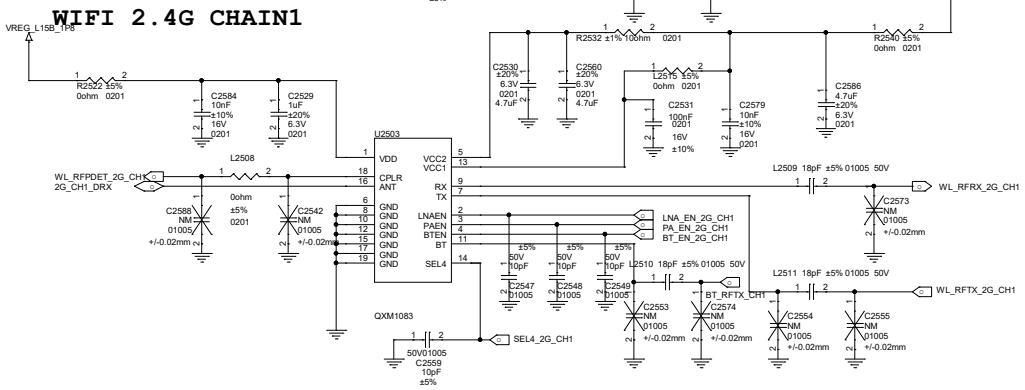

WIFI 5G CHAIN2

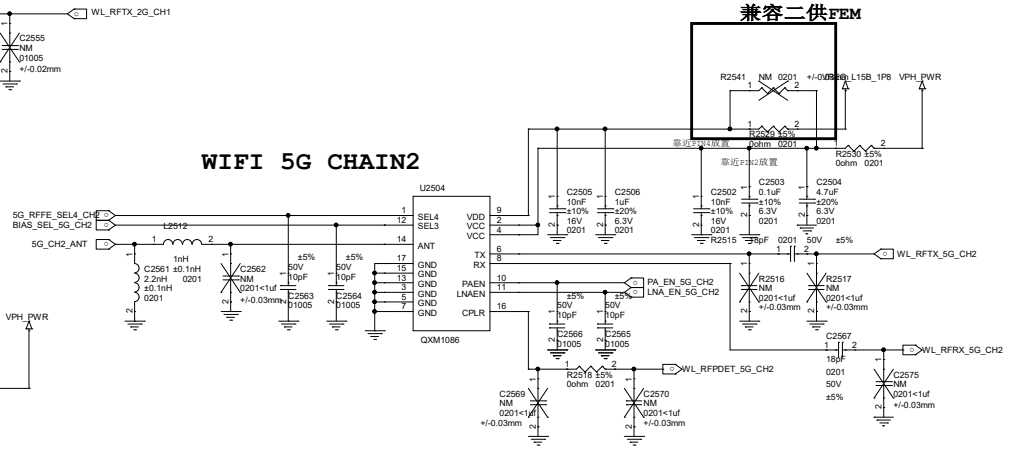

WIFI 5G CHAIN3

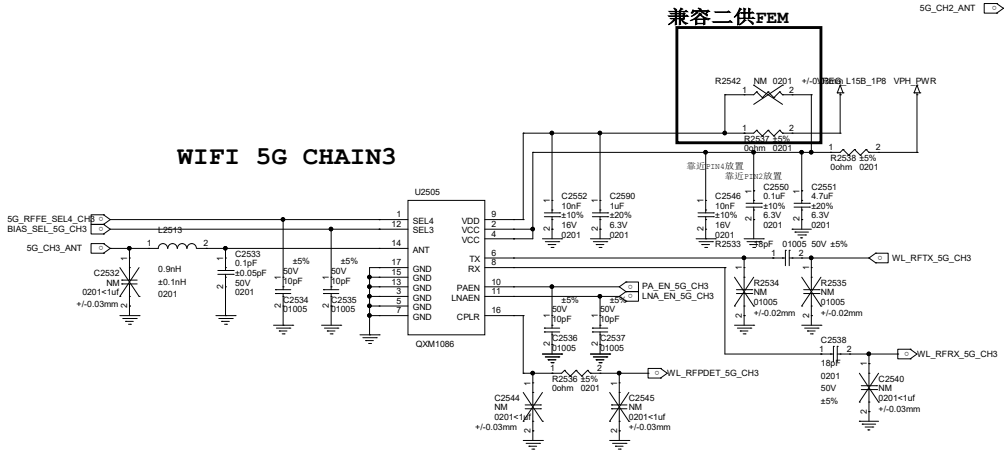

Title	M3_MAIN	
Size A2	Document Number SM8450 EVB	Rev P0
Date: Thursday, September 15, 2022	Sheet 25	79

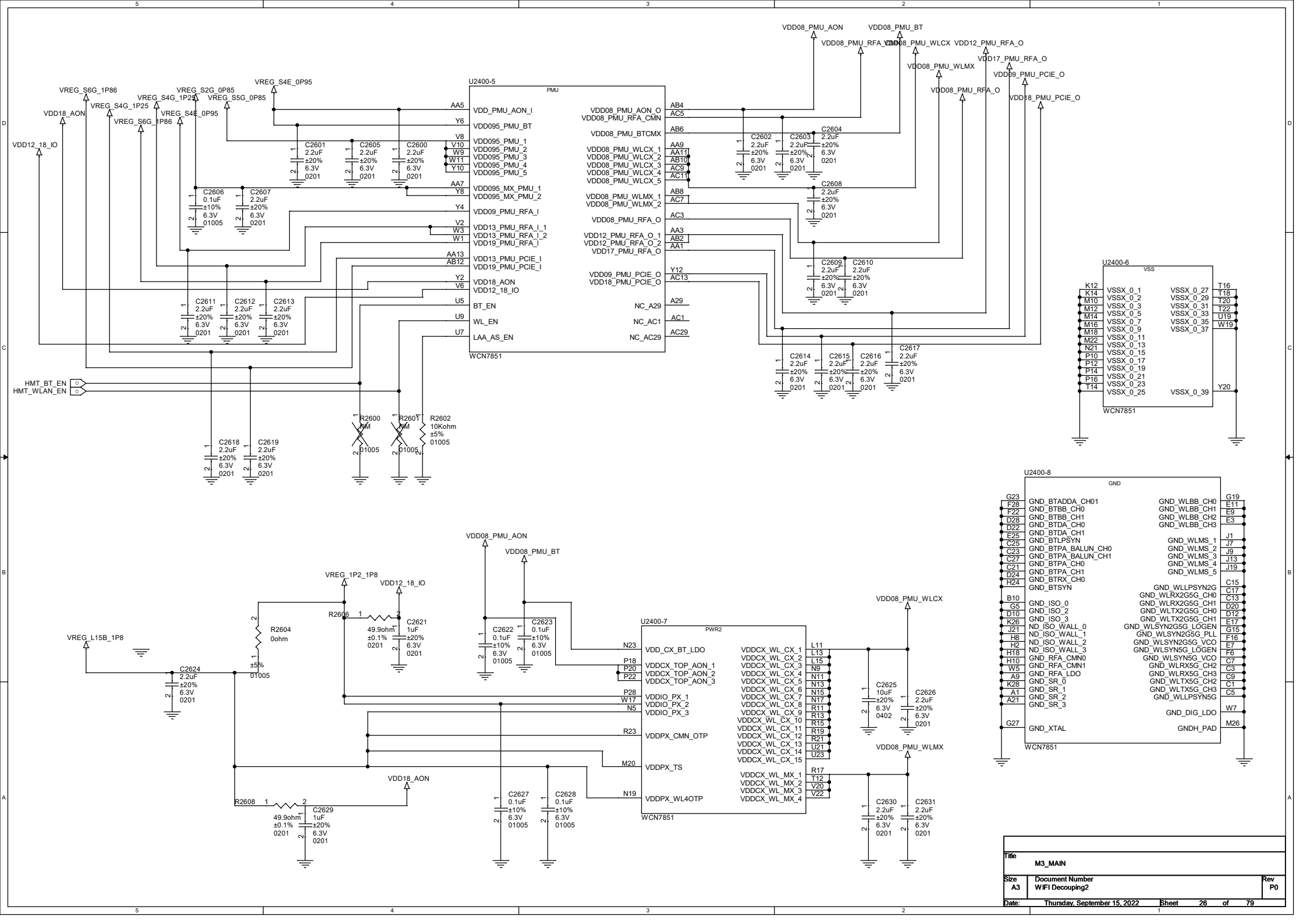
U2400-5
PMU
WCN7851
VDD_PMU_AON_I
VDD095_PMU_BT
VDD095_PMU_1
VDD095_PMU_2
VDD095_PMU_3
VDD095_PMU_4
VDD095_PMU_5
VDD095_MX_PMU_1
VDD095_MX_PMU_2
VDD09_PMU_RFA_I
VDD13_PMU_RFA_I_1
VDD13_PMU_RFA_I_2
VDD19_PMU_RFA_I
VDD13_PMU_PCIE_I
VDD19_PMU_PCIE_I
VDD18_AON
VDD12_18_IO
BT_EN
WL_EN
LAA_AS_EN
VDD08_PMU_AON_O
VDD08_PMU_RFA_CMN
VDD08_PMU_BTCMX
VDD08_PMU_WLCX_1
VDD08_PMU_WLCX_2
VDD08_PMU_WLCX_3
VDD08_PMU_WLCX_4
VDD08_PMU_WLCX_5
VDD08_PMU_WLMX_1
VDD08_PMU_WLMX_2
VDD08_PMU_RFA_O
VDD12_PMU_RFA_O_1
VDD12_PMU_RFA_O_2
VDD17_PMU_RFA_O
VDD09_PMU_PCIE_O
VDD18_PMU_PCIE_O
NC_A29
NC_AC1
NC_AC29
VDD08_PMU_AON
VDD08_PMU_BT
VDD08_PMU_RFA_CMN
VDD08_PMU_WLCX
VDD12_PMU_RFA_O
VDD17_PMU_RFA_O
VDD08_PMU_WLMX
VDD09_PMU_PCIE_O
VDD08_PMU_RFA_O
VDD18_PMU_PCIE_O
VREG_S6G_1P86
VREG_S4G_1P25
VREG_S2G_0P85
VREG_S4G_1P25
VREG_S5G_0P85
VREG_S4E_0P95
VDD18_AON
VREG_S6G_1P86
VREG_S4E_0P95
VDD12_18_IO
HMT_BT_EN
HMT_WLAN_EN
C2601 2.2uF ±20% 6.3V 0201
C2605 2.2uF ±20% 6.3V 0201
C2600 2.2uF ±20% 6.3V 0201
C2606 0.1uF ±10% 6.3V 01005
C2607 2.2uF ±20% 6.3V 0201
C2611 2.2uF ±20% 6.3V 0201
C2612 2.2uF ±20% 6.3V 0201
C2613 2.2uF ±20% 6.3V 0201
C2618 2.2uF ±20% 6.3V 0201
C2619 2.2uF ±20% 6.3V 0201
R2600 0ohm 01005
R2601 0ohm 01005
R2602 10Kohm ±5% 01005
C2602 2.2uF ±20% 6.3V 0201
C2603 2.2uF ±20% 6.3V 0201
C2604 2.2uF ±20% 6.3V 0201
C2608 2.2uF ±20% 6.3V 0201
C2609 2.2uF ±20% 6.3V 0201
C2610 2.2uF ±20% 6.3V 0201
C2614 2.2uF ±20% 6.3V 0201
C2615 2.2uF ±20% 6.3V 0201
C2616 2.2uF ±20% 6.3V 0201
C2617 2.2uF ±20% 6.3V 0201
U2400-6
VSS
WCN7851
VSSX_0_1
VSSX_0_2
VSSX_0_3
VSSX_0_5
VSSX_0_7
VSSX_0_9
VSSX_0_11
VSSX_0_13
VSSX_0_15
VSSX_0_17
VSSX_0_19
VSSX_0_21
VSSX_0_23
VSSX_0_25
VSSX_0_27
VSSX_0_29
VSSX_0_31
VSSX_0_33
VSSX_0_35
VSSX_0_37
VSSX_0_39
U2400-8
GND
WCN7851
GND_BTADDA_CH01
GND_BTBB_CH0
GND_BTBB_CH1
GND_BTDA_CH0
GND_BTDA_CH1
GND_BTLPSYN
GND_BTPA_BALUN_CH0
GND_BTPA_BALUN_CH1
GND_BTPA_CH0
GND_BTPA_CH1
GND_BTRX_CH0
GND_BTSYN
GND_ISO_0
GND_ISO_2
GND_ISO_3
ND_ISO_WALL_0
ND_ISO_WALL_1
ND_ISO_WALL_2
ND_ISO_WALL_3
GND_RFA_CMN0
GND_RFA_CMN1
GND_RFA_LDO
GND_SR_0
GND_SR_1
GND_SR_2
GND_SR_3
GND_XTAL
GND_WLBB_CH0
GND_WLBB_CH1
GND_WLBB_CH2
GND_WLBB_CH3
GND_WLMS_1
GND_WLMS_2
GND_WLMS_3
GND_WLMS_4
GND_WLMS_5
GND_WLLPSYN2G
GND_WLRX2G5G_CH0
GND_WLRX2G5G_CH1
GND_WLTX2G5G_CH0
GND_WLTX2G5G_CH1
GND_WLSYN2G5G_LOGEN
GND_WLSYN2G5G_PLL
GND_WLSYN2G5G_VCO
GND_WLSYN5G_LOGEN
GND_WLSYN5G_VCO
GND_WLRX5G_CH2
GND_WLRX5G_CH3
GND_WLTX5G_CH2
GND_WLTX5G_CH3
GND_WLLPSYN5G
GND_DIG_LDO
GNDH_PAD
VREG_L15B_1P8
C2624 2.2uF ±20% 6.3V 0201
R2604 0ohm ±5% 01005
VREG_1P2_1P8
VDD12_18_IO
R2606 49.9ohm ±0.1% 0201
C2621 1uF ±20% 6.3V 0201
VDD08_PMU_AON
VDD08_PMU_BT
C2622 0.1uF ±10% 6.3V 01005
C2623 0.1uF ±10% 6.3V 01005
U2400-7
PWR2
WCN7851
VDD_CX_BT_LDO
VDDCX_TOP_AON_1
VDDCX_TOP_AON_2
VDDCX_TOP_AON_3
VDDIO_PX_1
VDDIO_PX_2
VDDIO_PX_3
VDDPX_CMN_OTP
VDDPX_TS
VDDPX_WL4OTP
VDDCX_WL_CX_1
VDDCX_WL_CX_2
VDDCX_WL_CX_3
VDDCX_WL_CX_4
VDDCX_WL_CX_5
VDDCX_WL_CX_6
VDDCX_WL_CX_7
VDDCX_WL_CX_8
VDDCX_WL_CX_9
VDDCX_WL_CX_10
VDDCX_WL_CX_11
VDDCX_WL_CX_12
VDDCX_WL_CX_13
VDDCX_WL_CX_14
VDDCX_WL_CX_15
VDDCX_WL_MX_1
VDDCX_WL_MX_2
VDDCX_WL_MX_3
VDDCX_WL_MX_4
VDD08_PMU_WLCX
VDD08_PMU_WLMX
C2625 10uF ±20% 6.3V 0402
C2626 2.2uF ±20% 6.3V 0201
VDD18_AON
R2608 49.9ohm ±0.1% 0201
C2629 1uF ±20% 6.3V 0201
C2627 0.1uF ±10% 6.3V 01005
C2628 0.1uF ±10% 6.3V 01005
C2630 2.2uF ±20% 6.3V 0201
C2631 2.2uF ±20% 6.3V 0201
Title
M3_MAIN
Size
A3
Document Number
WIFI Decouping2
Rev
P0
Date:
Thursday, September 15, 2022
Sheet
26
of
79

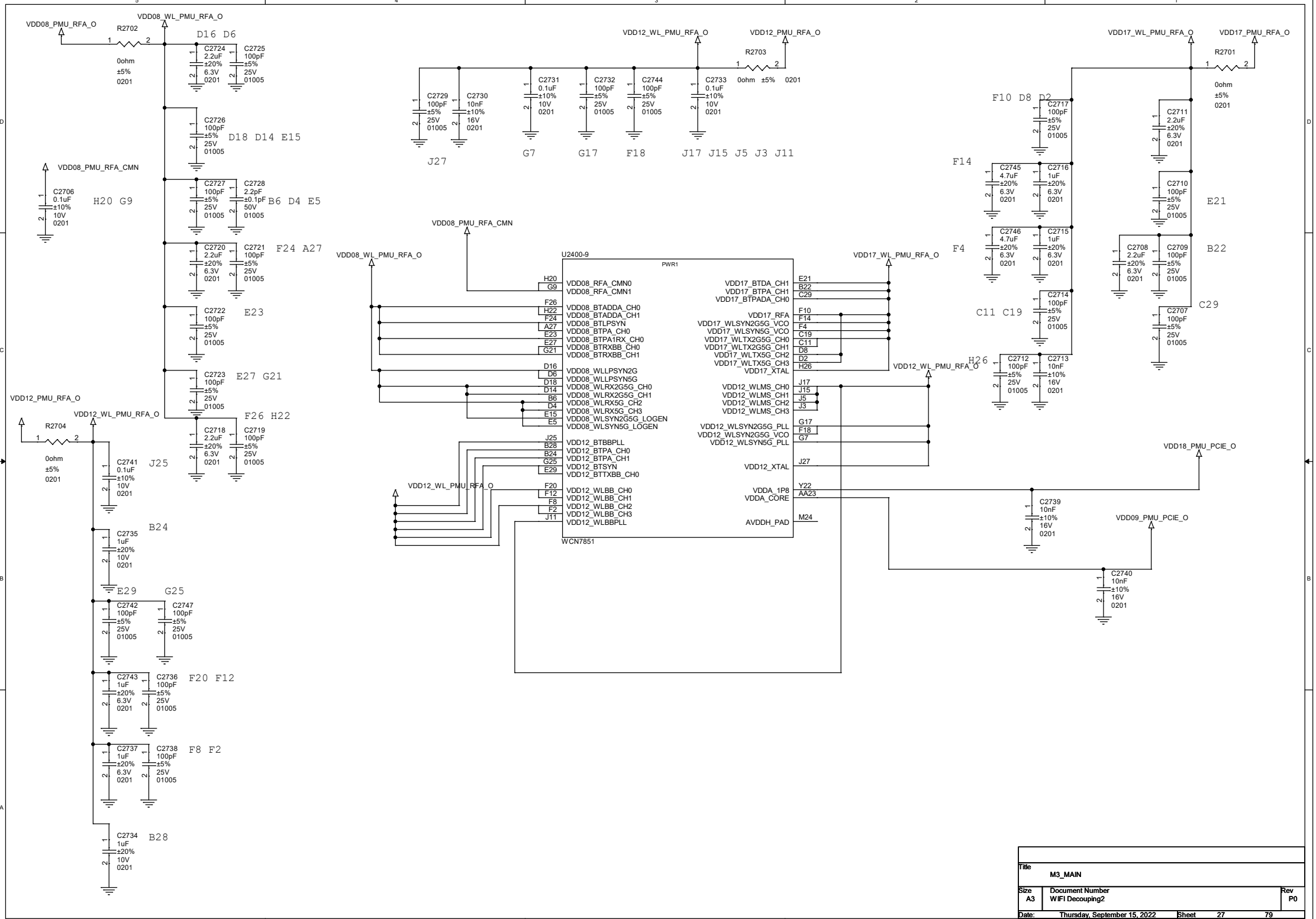

Title	M3_MAIN	
Size A3	Document Number WIFI Decouping2	Rev P0
Date: Thursday, September 15, 2022	Sheet 27	79

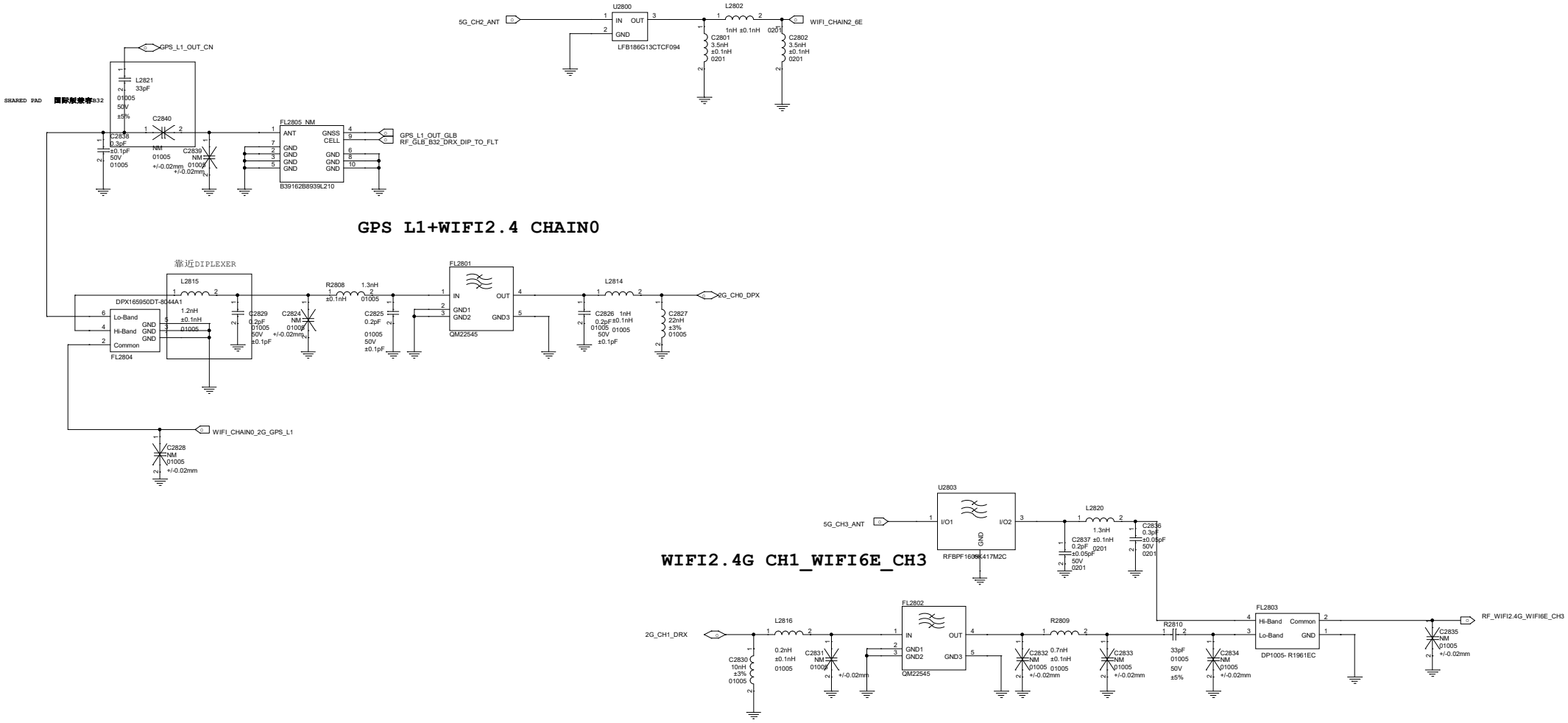

Title	M3_MAIN	
Size A2	Document Number WIFI Decoupling2	Rev P0
Date: Thursday, September 15, 2022	Sheet 28	79

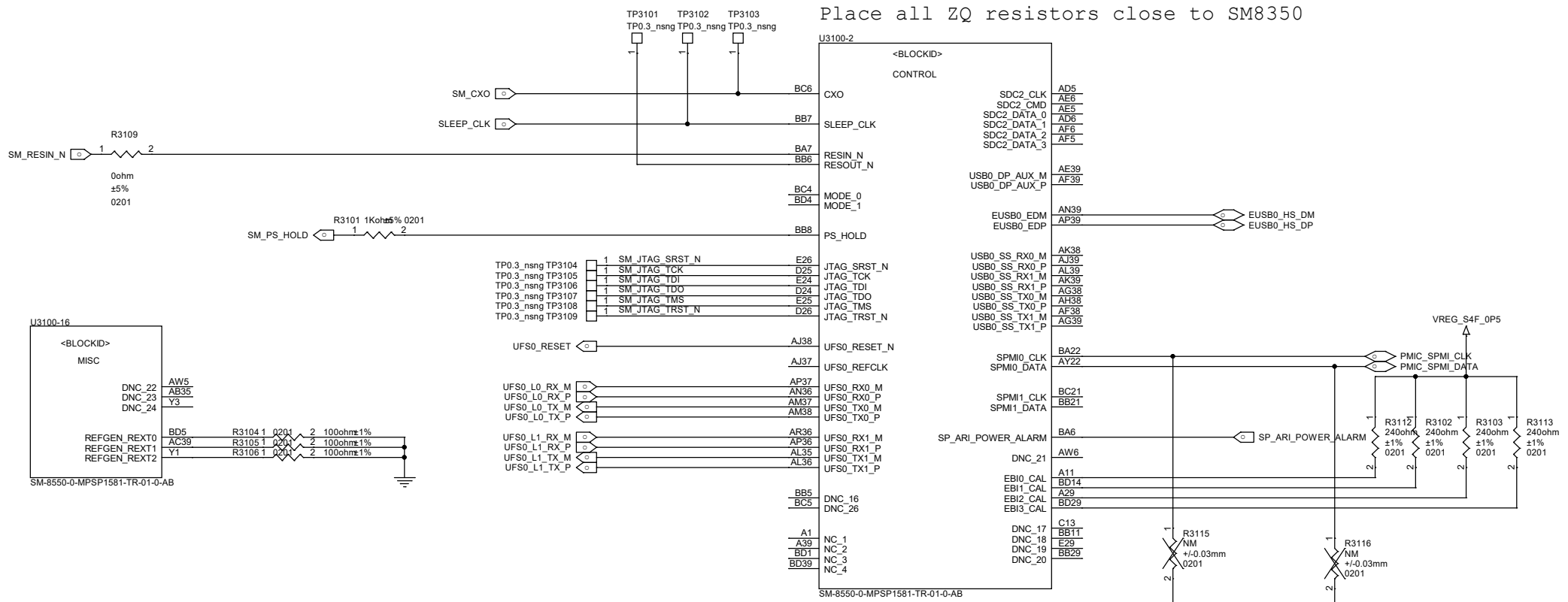

MSM skin temperature thermistor

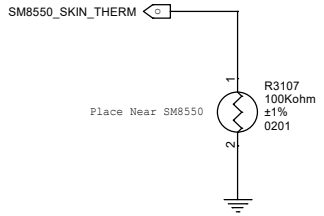

Quiet thermistor Place on a cool place

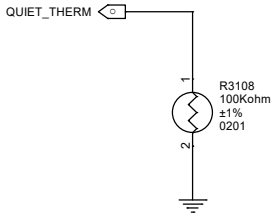

Title	M3_MAIN	
Size A3	Document Number SM8450 EVB	Rev P0
Date: Thursday, September 15, 2022	Sheet 31	79

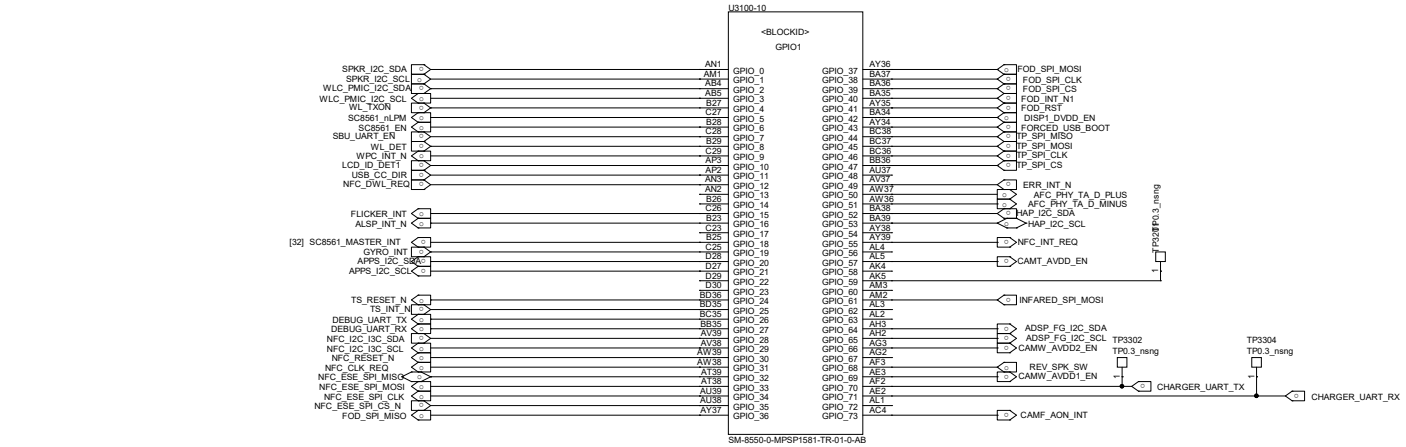

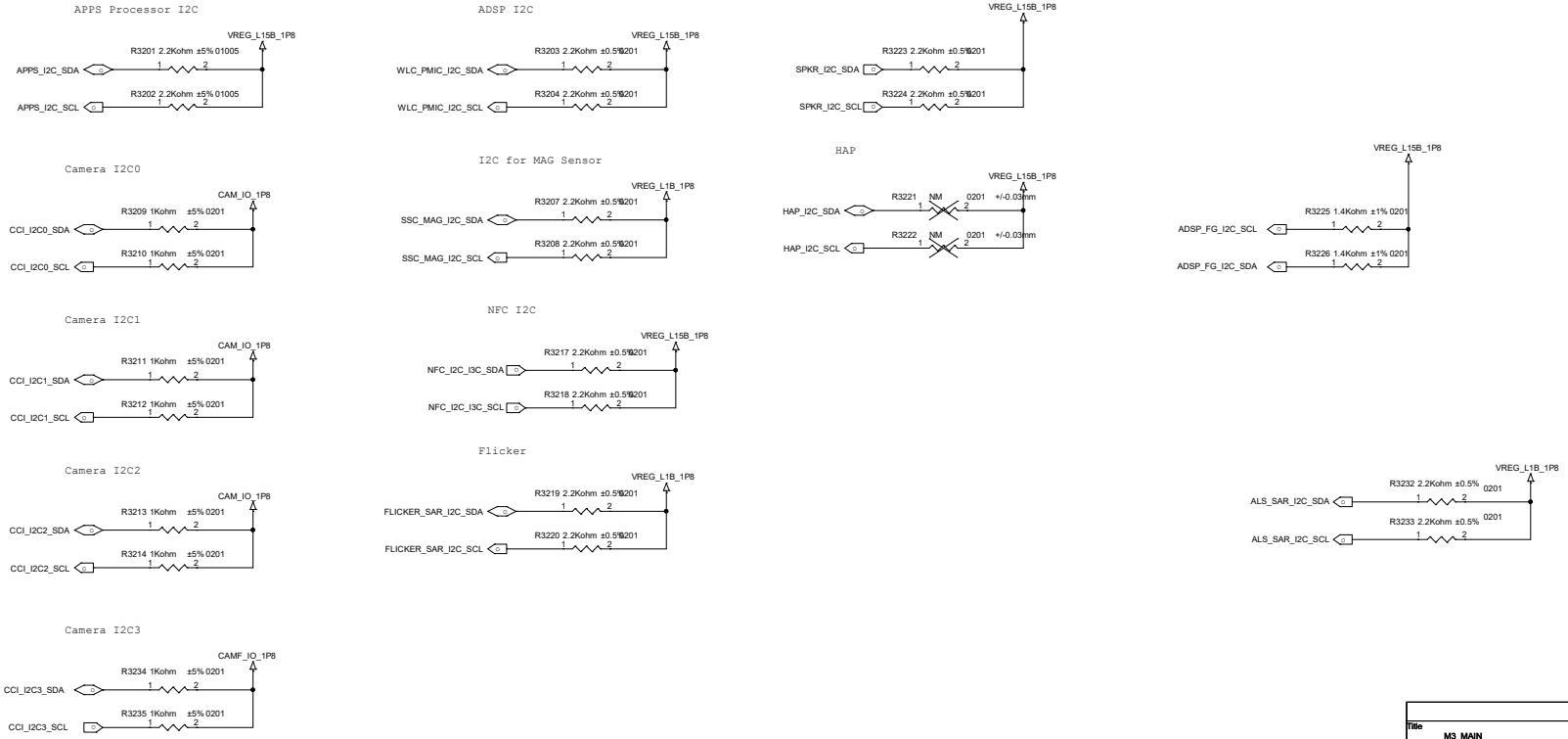

Title	M3_MAIN	
Size A2	Document Number SM8450 GPIO-1	Rev P0
Date: Thursday, September 15, 2022	Sheet 32	79

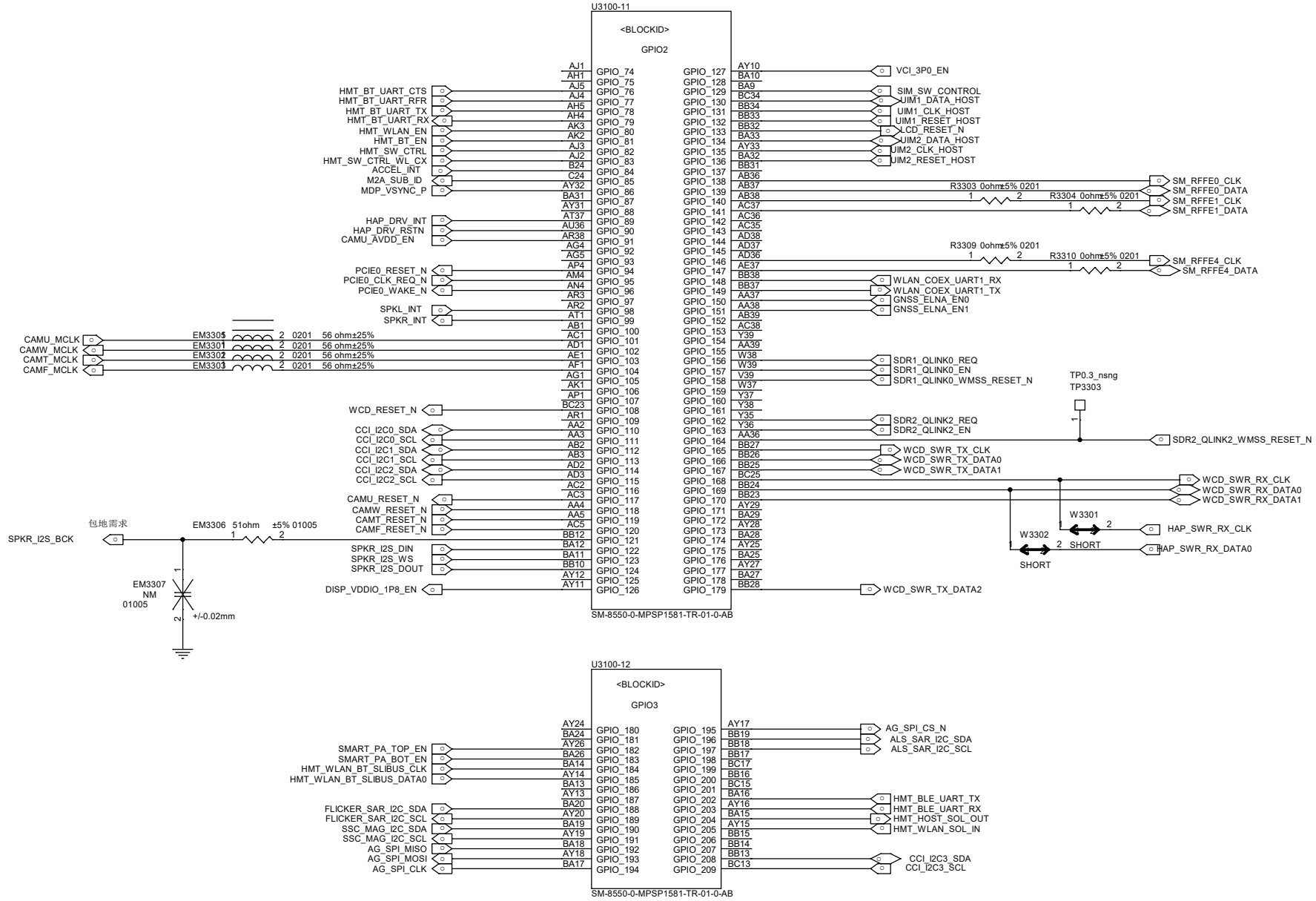

Title	M3_MAIN	
Size A3	Document Number SM8450 GPIO-2	Rev P0
Date: Thursday, September 15, 2022	Sheet 33	79

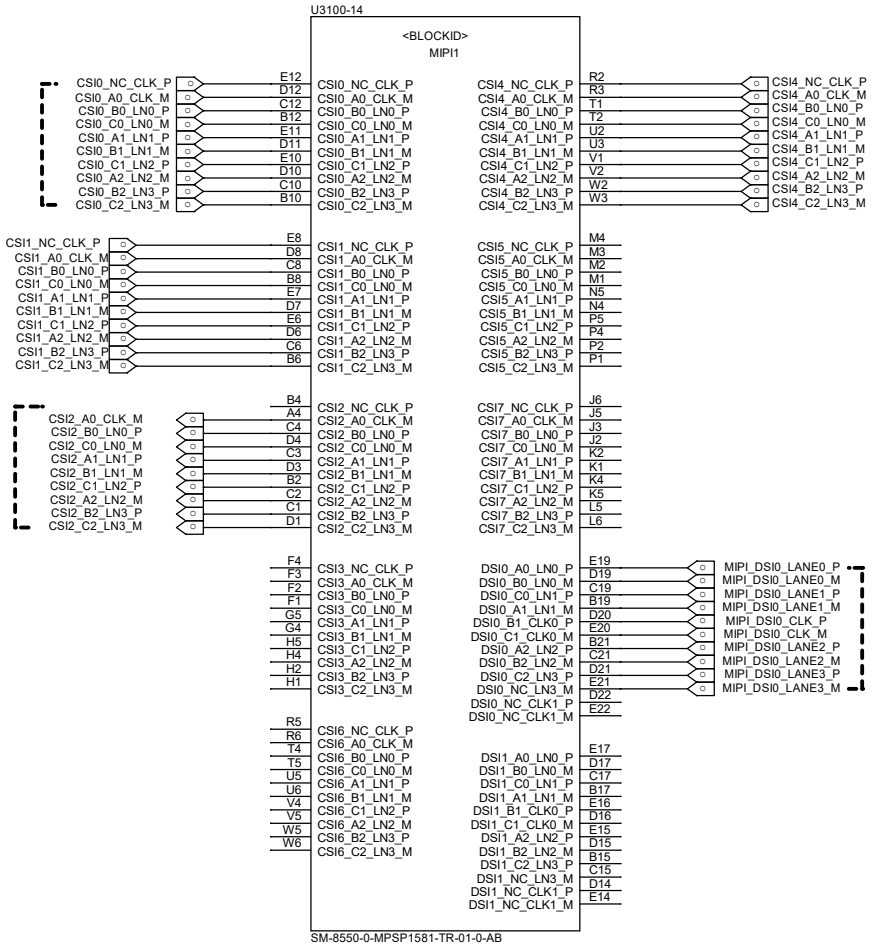

Title	M3_MAIN	
Size A3	Document Number SM8450 MIPI	Rev P0
Date: Thursday, September 15, 2022	Sheet 34	79

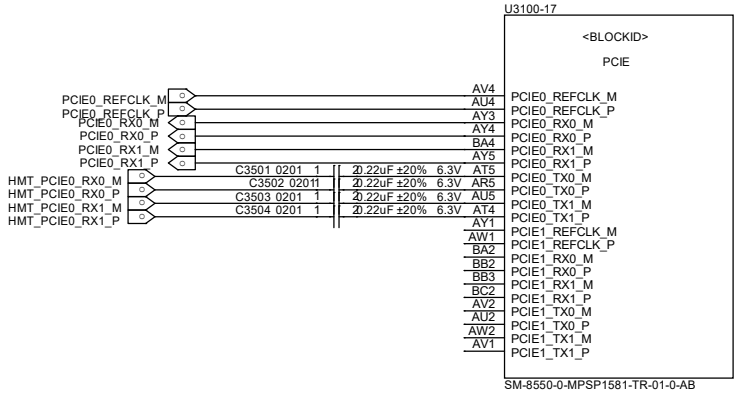

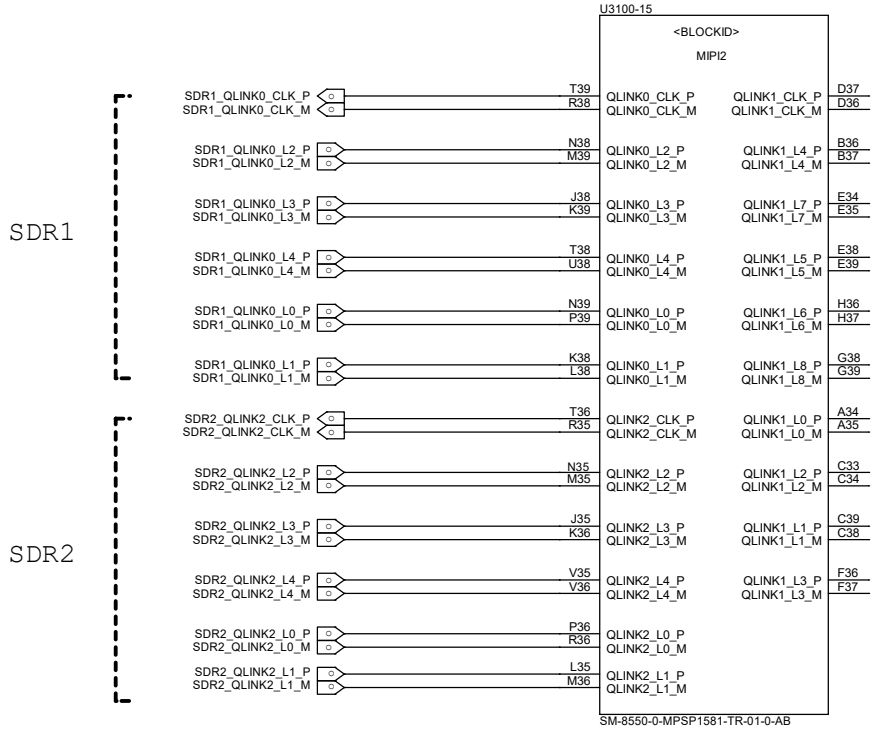

QLINK1 for mmW

Title	M3_MAIN	
Size A3	Document Number SM8450 RF MIPI	Rev P0
Date: Thursday, September 15, 2022	Sheet	

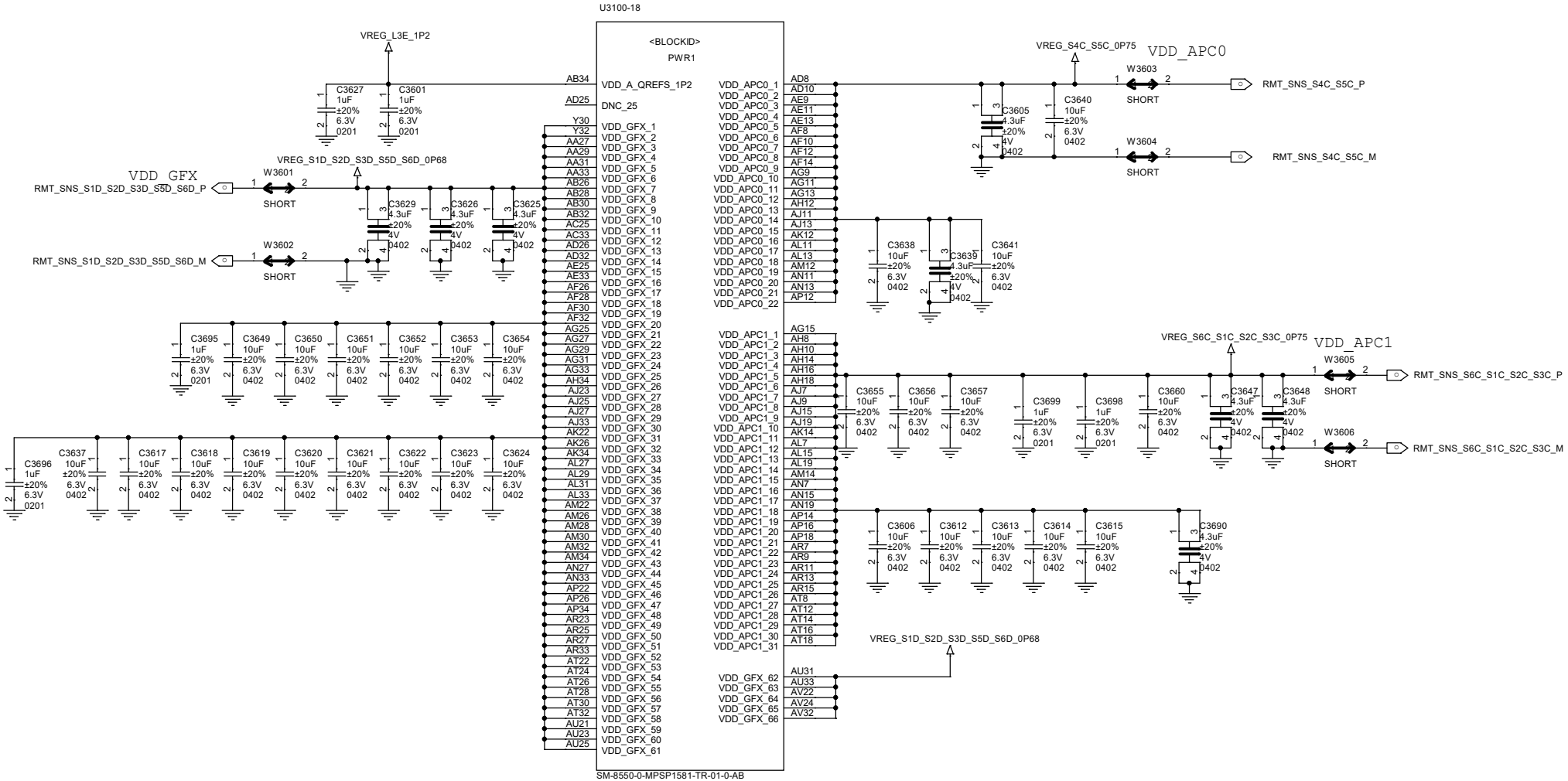

Title	M3_MAIN	
Size A3	Document Number SM8450 EVB	Rev P0
Date: Thursday, September 15, 2022	Sheet 36	79

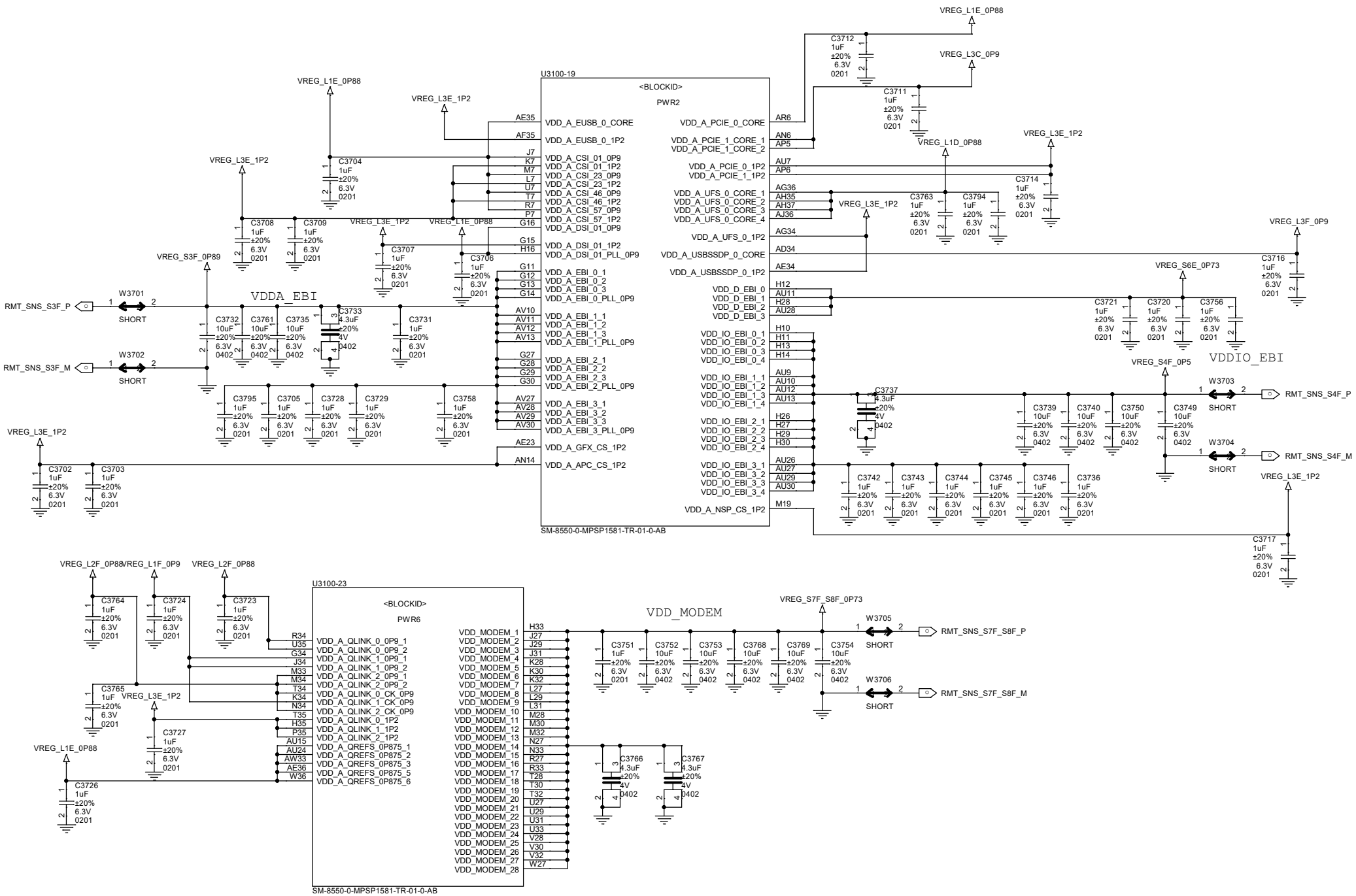

Title	M3_MAIN	
Size A3	Document Number SM8450 EVB	Rev P0
Date: Thursday, September 15, 2022	Sheet 37	80

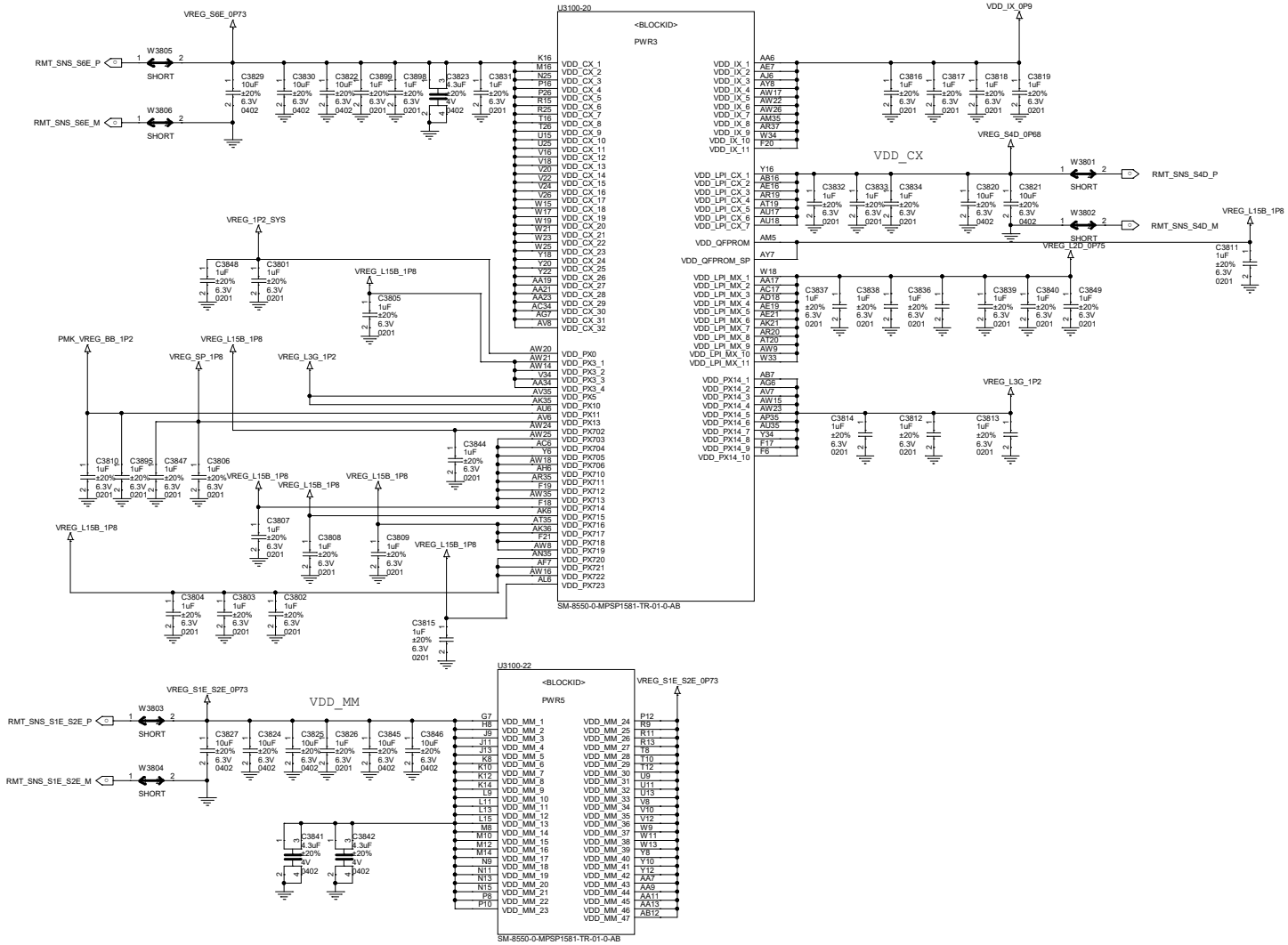

Title	M3_MAIN
Size A2	Document Number SM8450 EVB
Rev	P0
Date:	Thursday, September 15, 2022
Sheet	

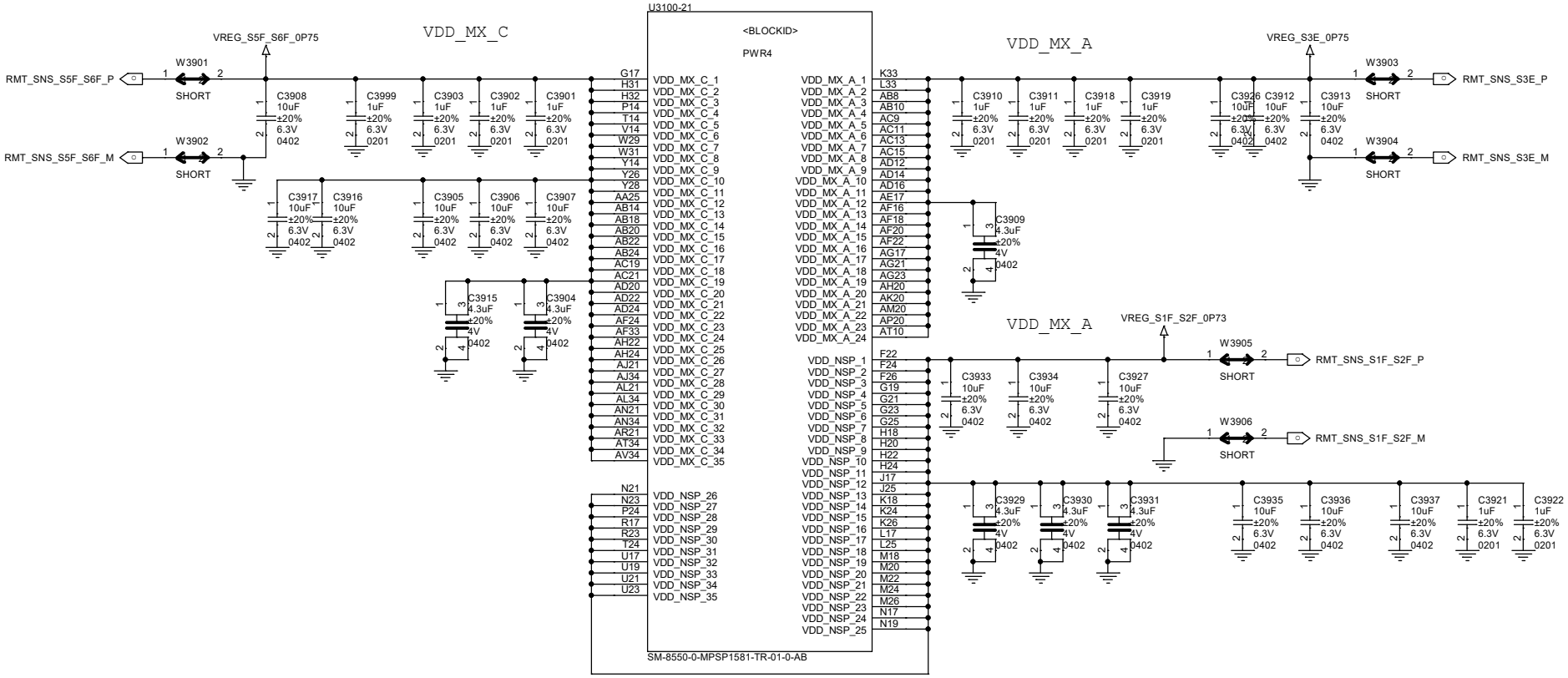

Title	M3_MAIN	
Size A3	Document Number SM8450 EVB	Rev P0
Date: Thursday, September 15, 2022	Sheet 39 of 79	

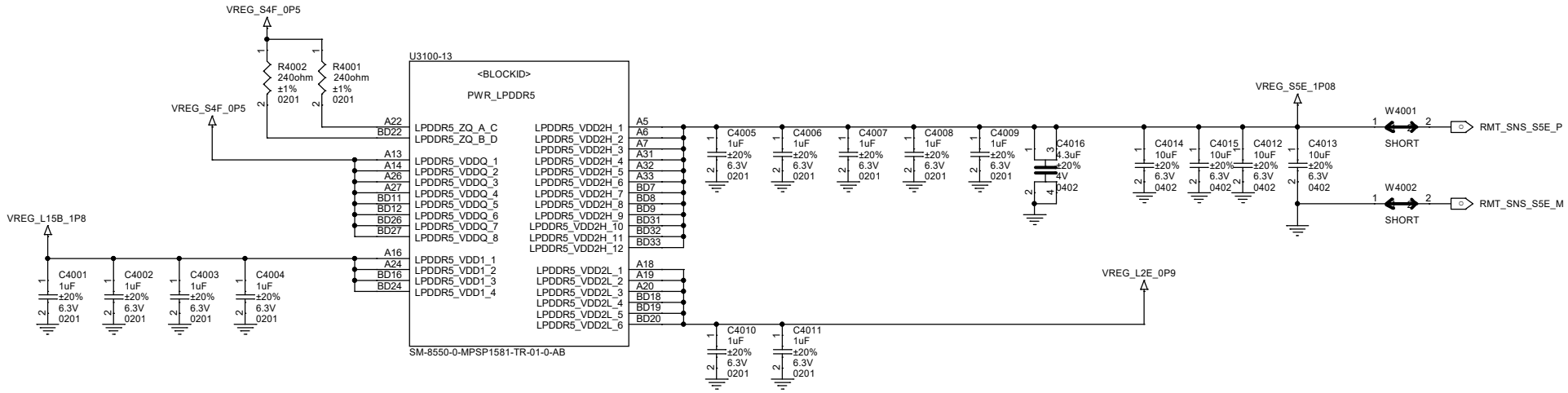

Title	M3_MAIN	
Size A3	Document Number SM8450 EVB	Rev P0
Date: Thursday, September 15, 2022	Sheet 40	79

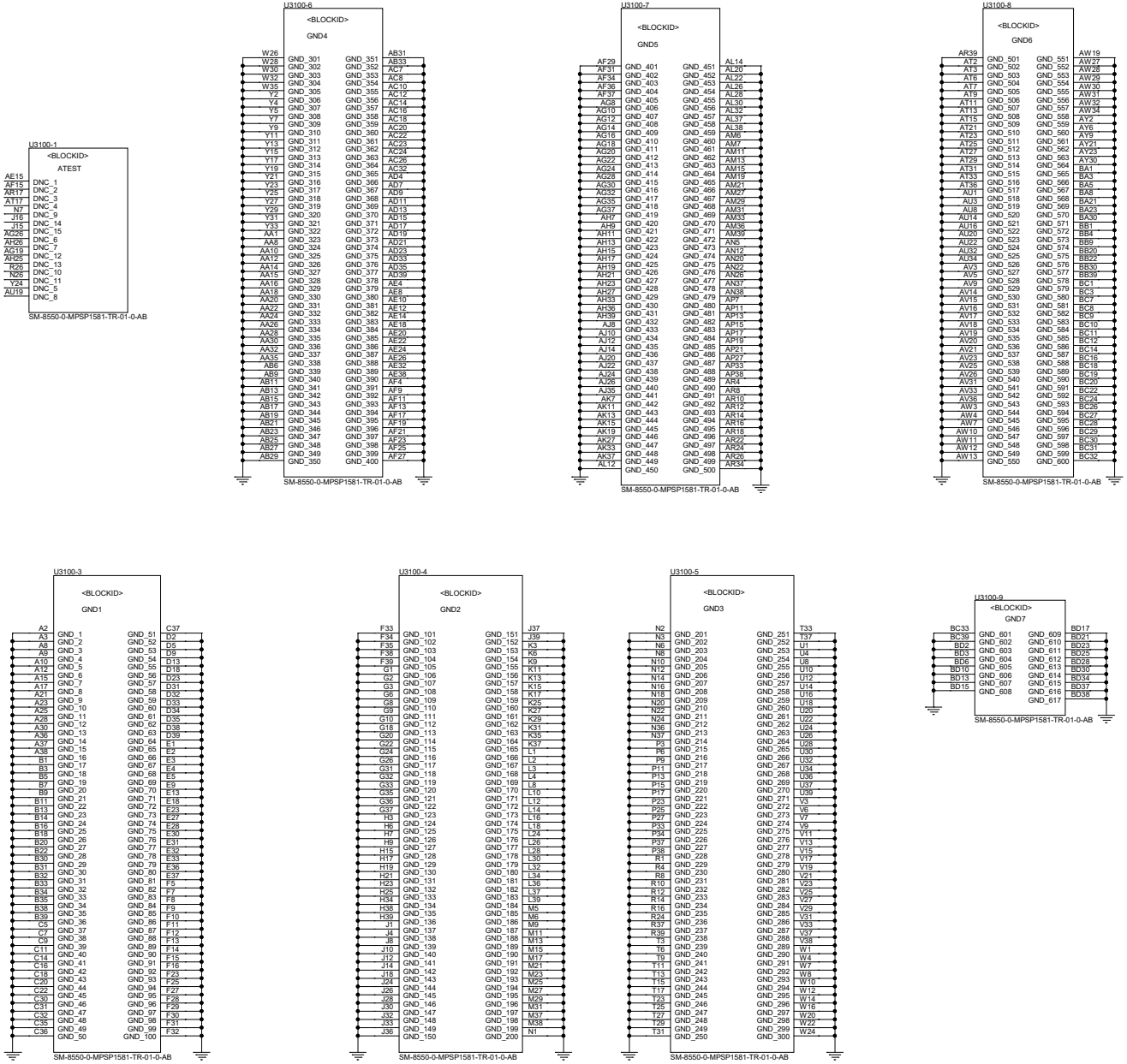

Title	M3_MAIN		
Size A2	Document Number SM8450 EVB		Rev P0
Date: Thursday, September 15, 2022	Sheet 41 of 79		

SPMI_CLK & SPMI_DATA should be routed away from noisy traces

BUILD ID按照原版本设计，后续按需求修改

GPIO 1/2/3 为option引脚，禁止用作其他用途

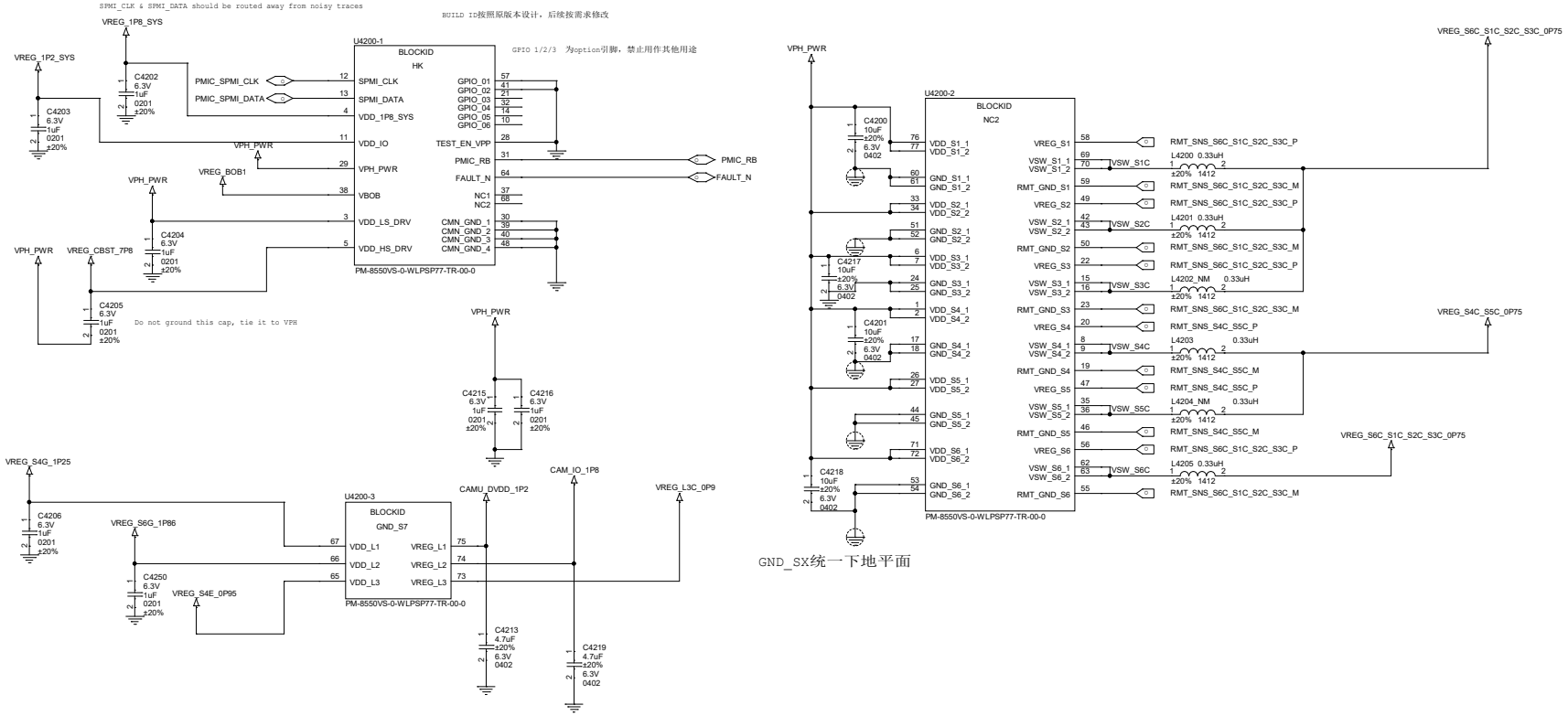

GND_SX统一下地平面

Title	M3_MAIN		
Size A2	Document Number PM8350 XO&CTRL		Rev P0
Date: Thursday, September 15, 2022	Sheet 42 of 79		

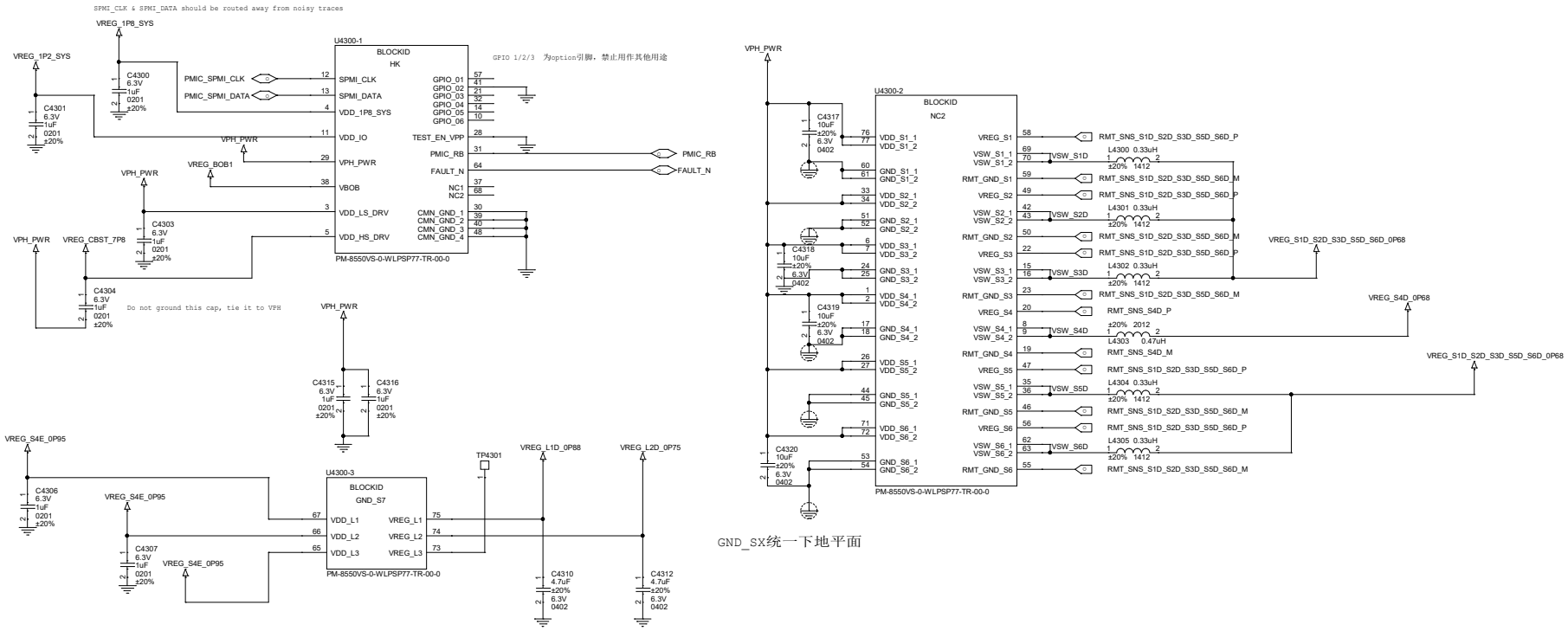

GND_SX统一下地平面

Title	M3_MAIN	
Size A2	Document Number SM8450 EVB	Rev P0
Date: Thursday, September 15, 2022	Sheet	

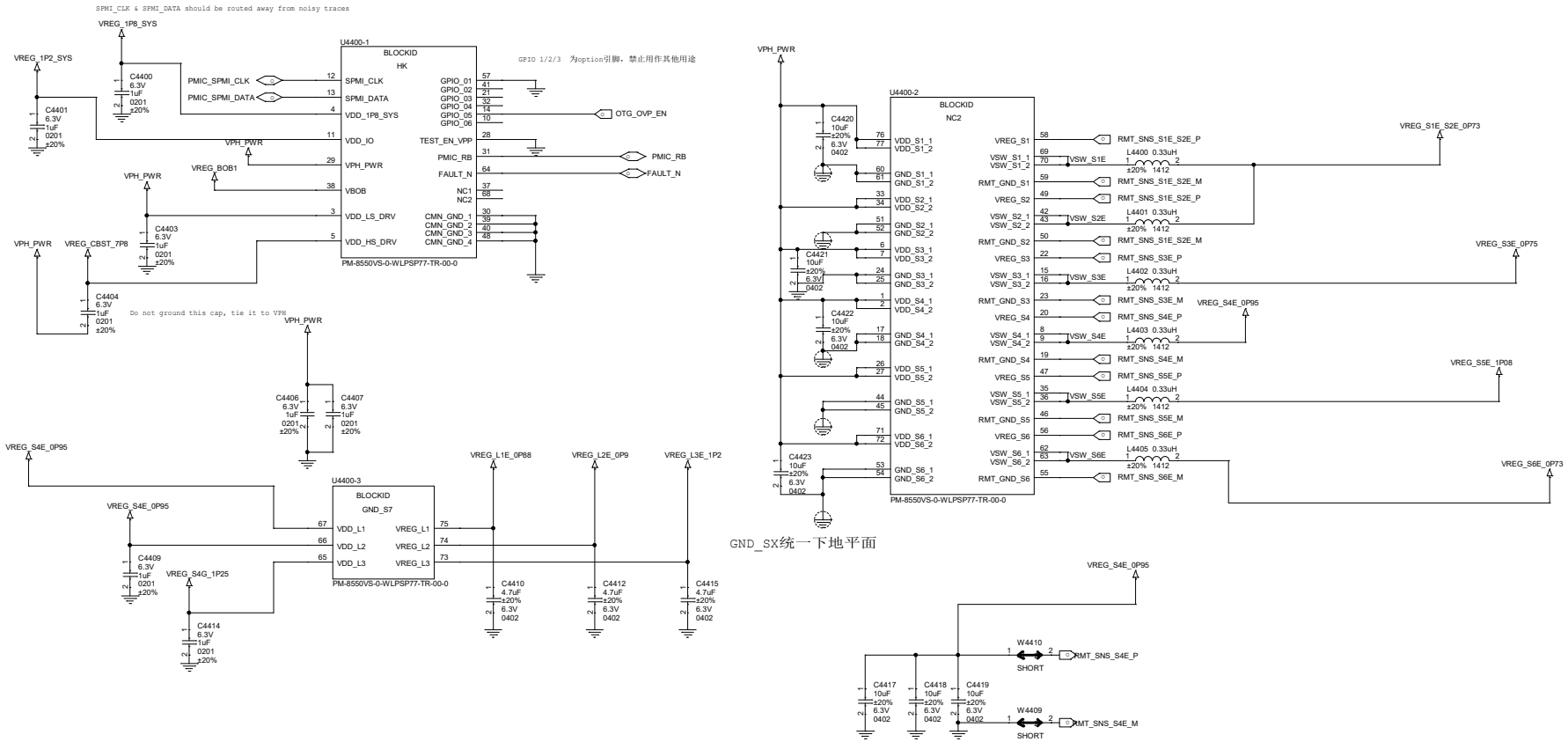

Title	M3_MAIN	
Size A2	Document Number SM8450 EVB	Rev P0
Date: Thursday, September 15, 2022	Sheet	

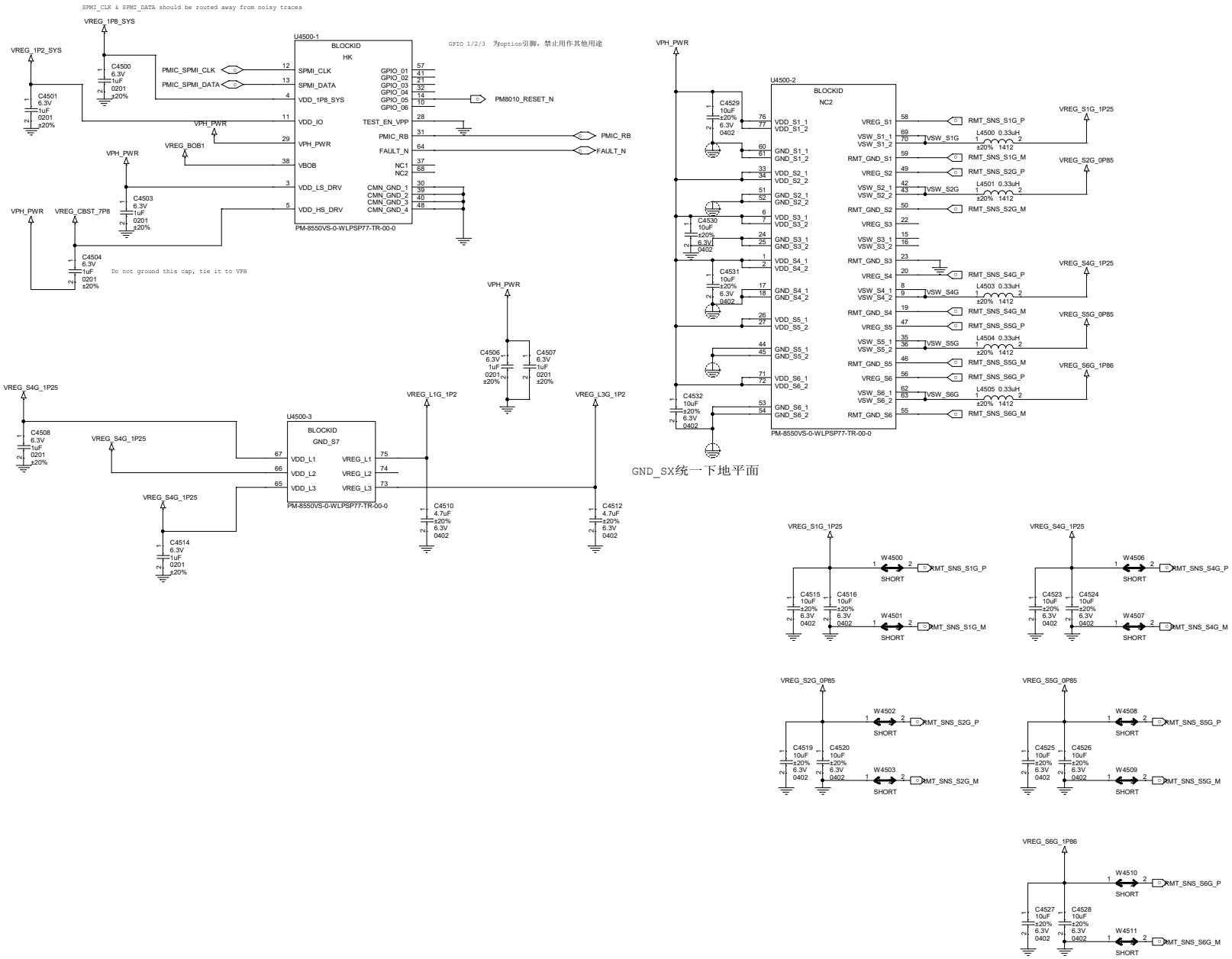

Title	M3_MAIN
Size A2	Document Number PM8350 LDOs
Rev	P0
Date:	Thursday, September 15, 2022
Sheet	

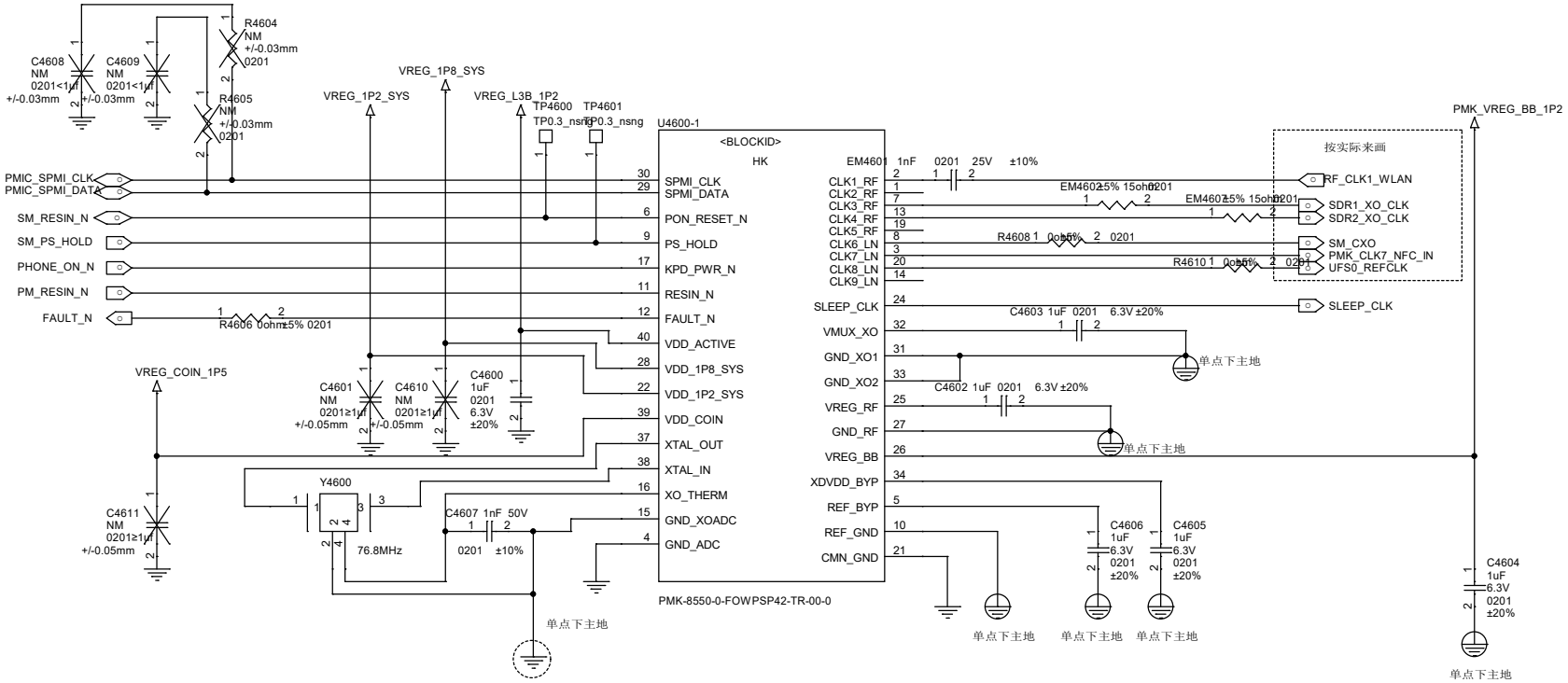

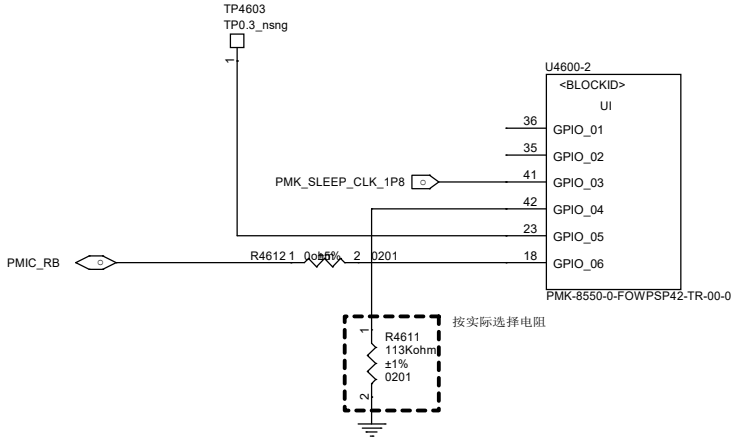

Title	M3_MAIN	
Size A3	Document Number SM8450 EVB	Rev P0
Date: Thursday, September 15, 2022	Sheet	

VDD_SX统一接VPH_PWR shape

GND_SX统一下地平面

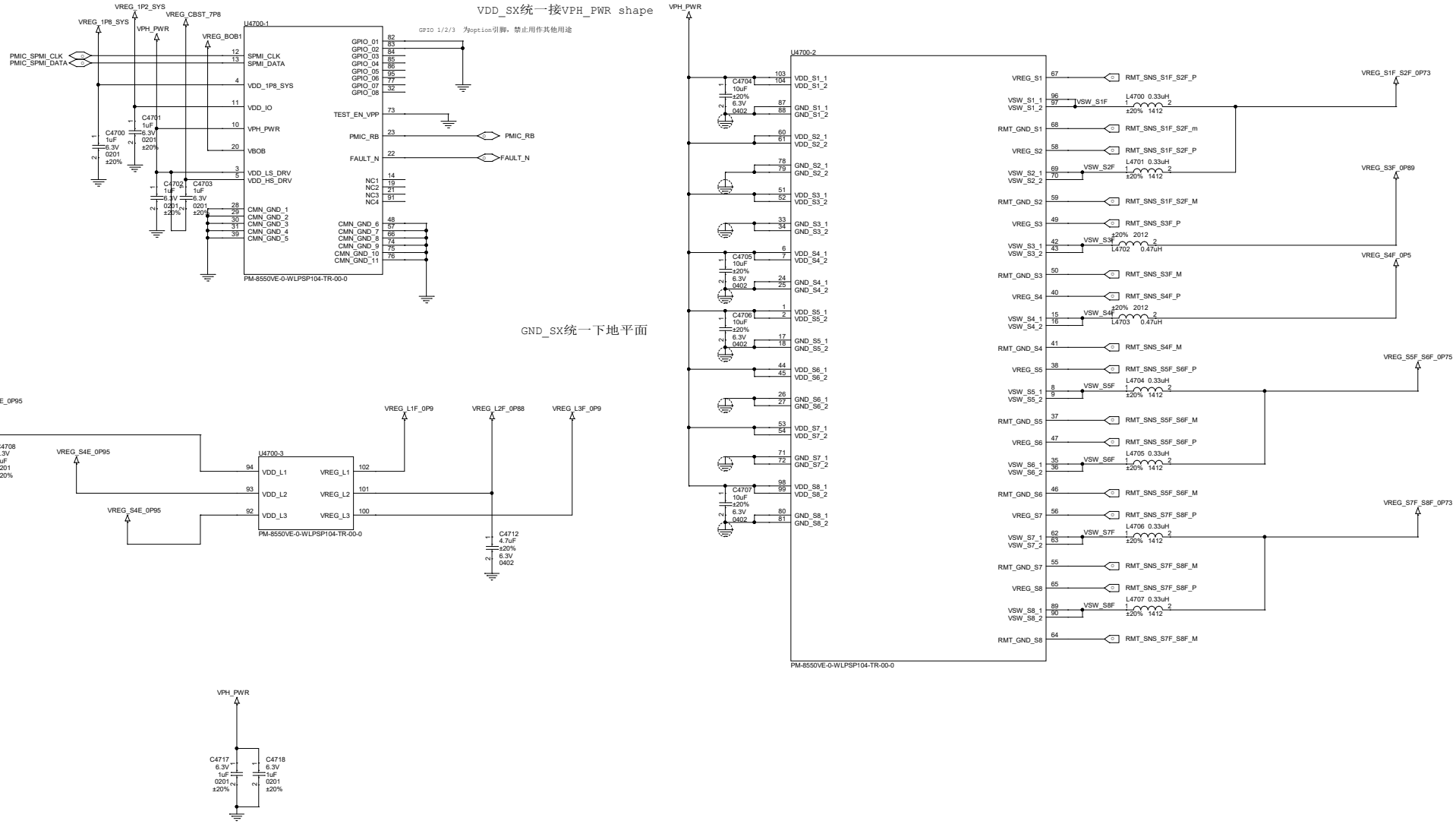

Title	M3_MAIN		
Size A2	Document Number PM8350C CTRL&GND		Rev P0
Date: Thursday, September 15, 2022	Sheet 47	79	

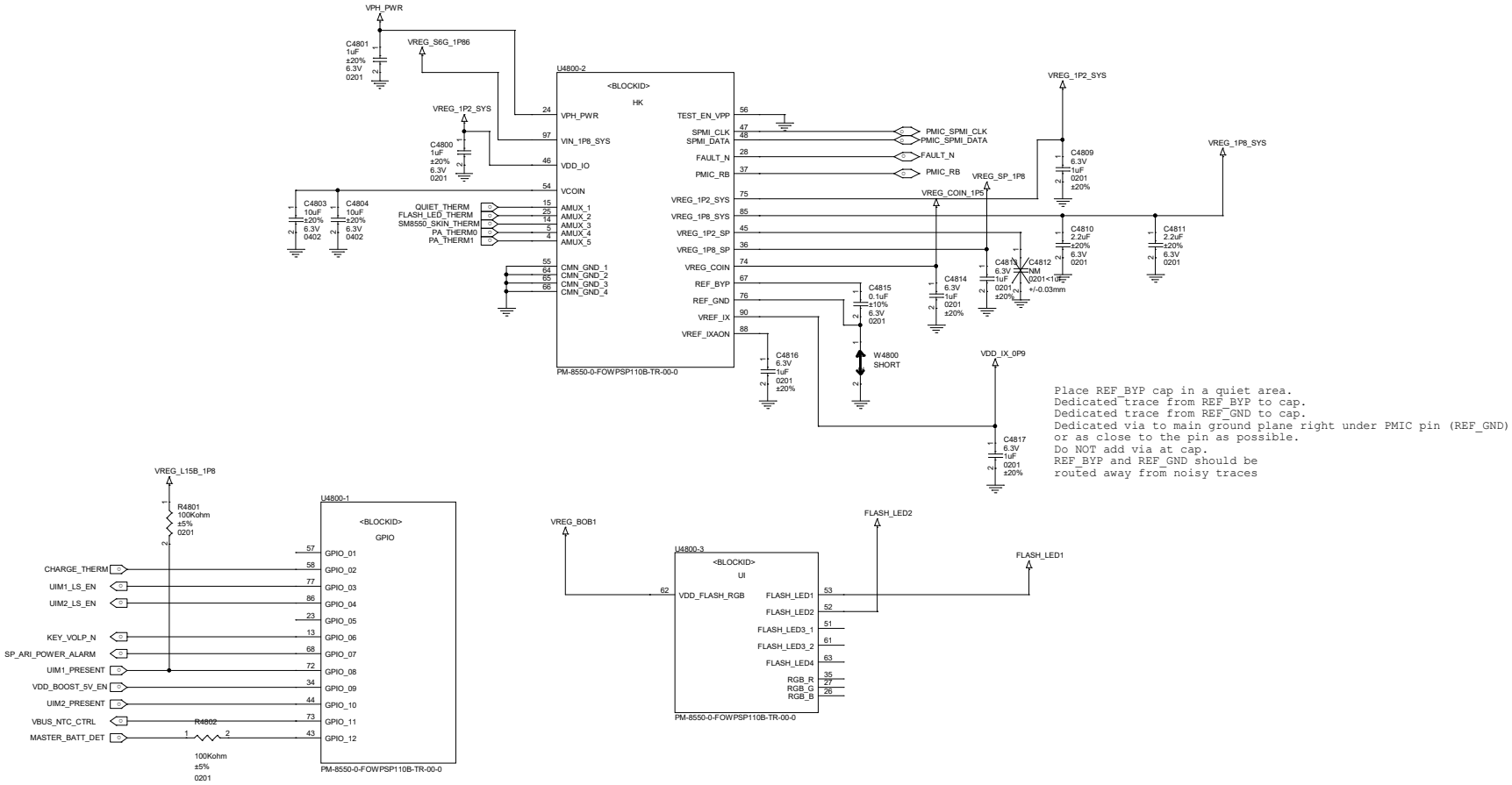

Place REF_BYP cap in a quiet area.
Dedicated trace from REF_BYP to cap.
Dedicated trace from REF_GND to cap.
Dedicated via to main ground plane right under PMIC pin (REF_GND)
or as close to the pin as possible.
Do NOT add via at cap.
REF_BYP and REF_GND should be
routed away from noisy traces

Title	M3_MAIN	
Size A2	Document Number SM8450 EVB	Rev P0
Date: Thursday, September 15, 2022	Sheet 48 of 79	

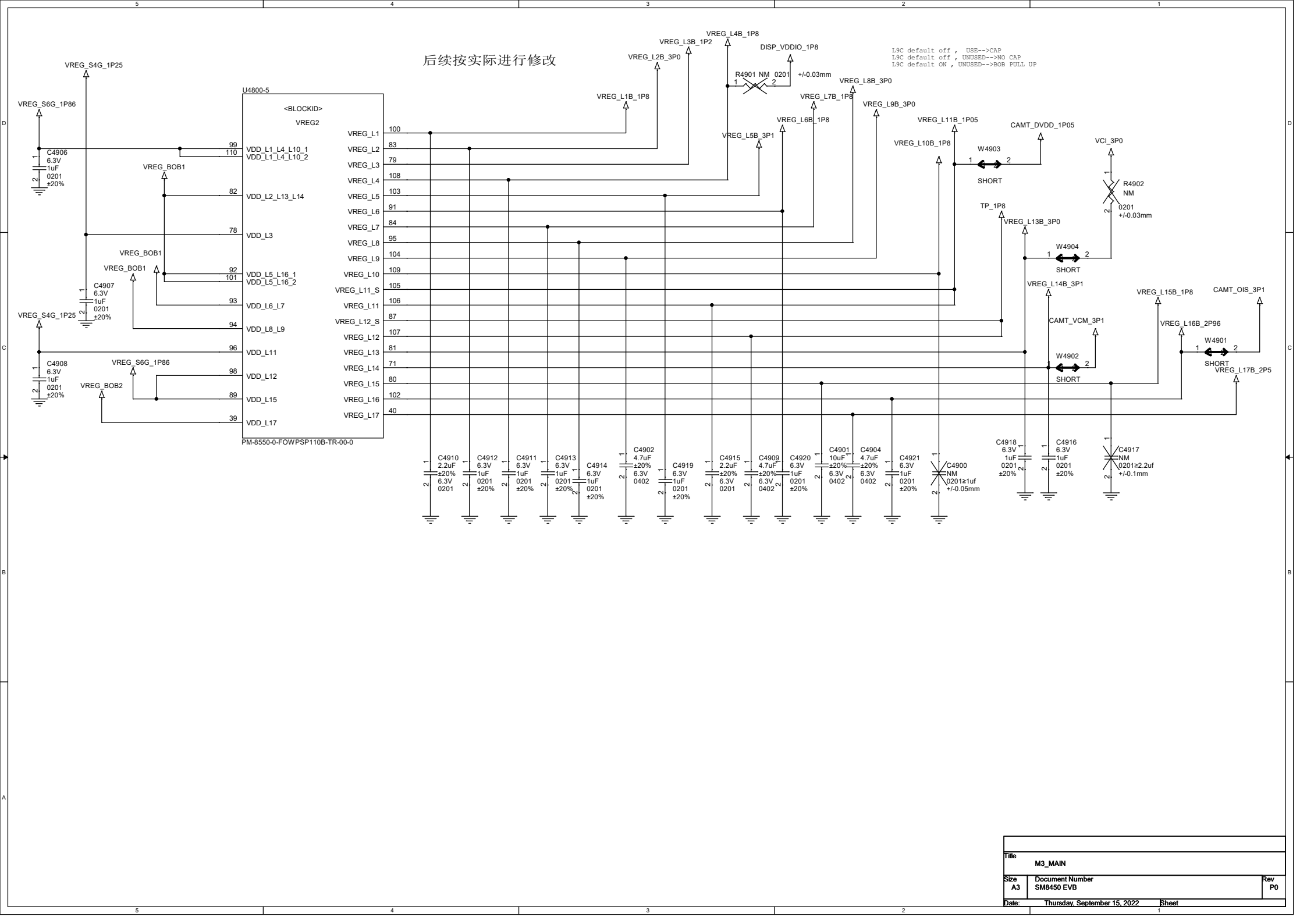

Title	M3_MAIN	
Size A3	Document Number SM8450 EVB	Rev P0
Date: Thursday, September 15, 2022	Sheet	

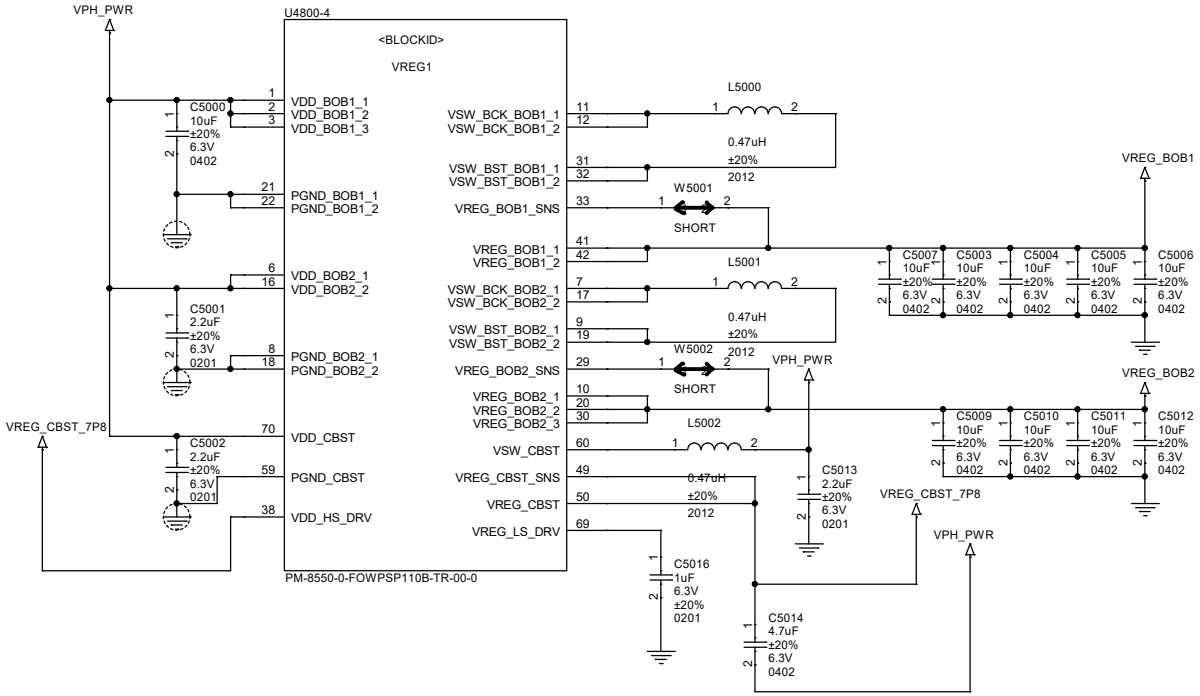

Title	M3_MAIN	
Size A3	Document Number PM8350C LDOs	Rev P0
Date: Thursday, September 15, 2022	Sheet	

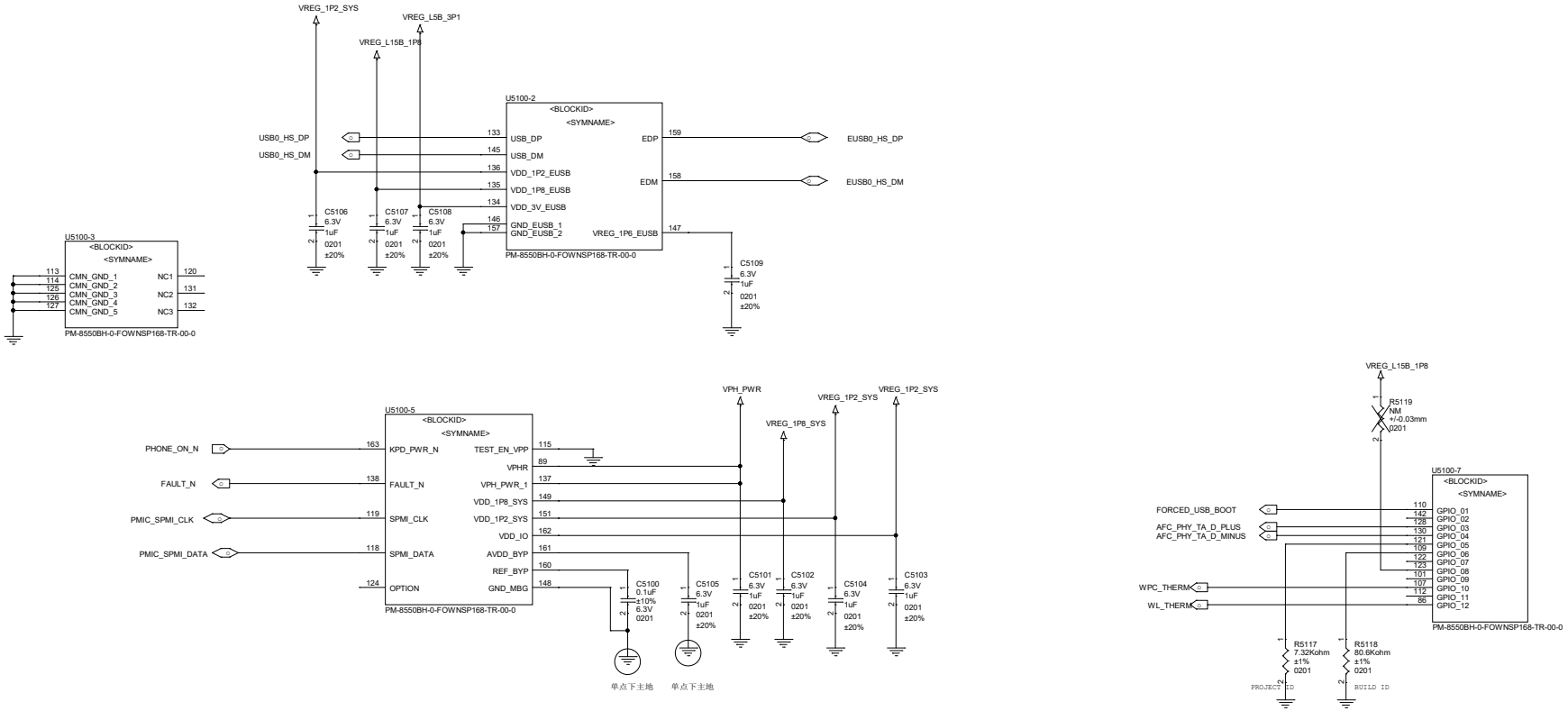

Title	M3_MAIN	
Size A2	Document Number PM8450 HK IO&LDO	Rev P0
Date: Thursday, September 15, 2022	Sheet 51	80

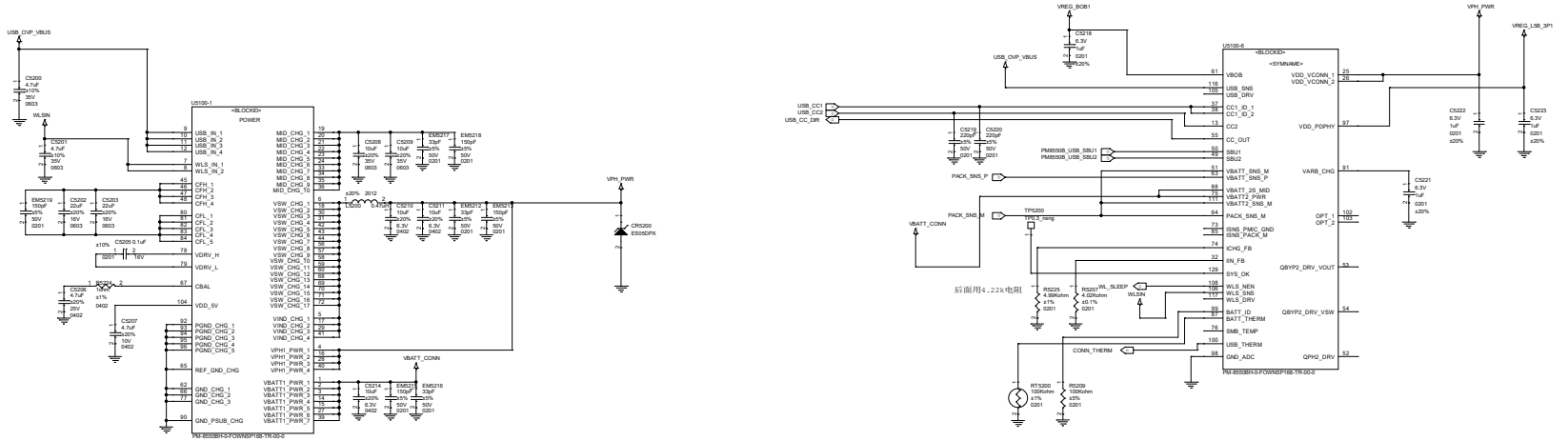

Title	M3_MAIN	
Size: A1	Document Number: SM8450 EVB	Rev: P0
Date: Thursday, September 15, 2022	Sheet	

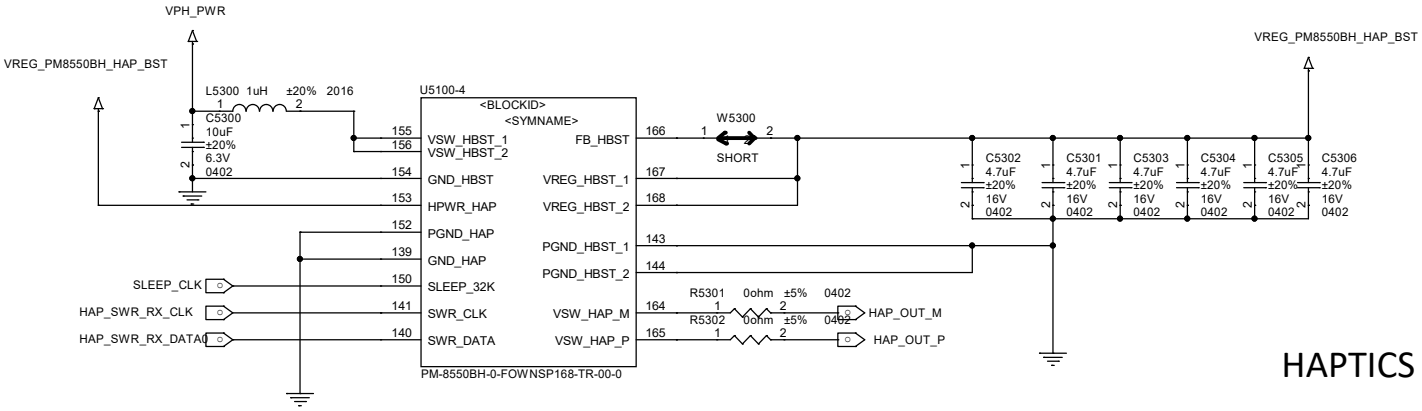

HAPTICS

Title	M3_MAIN		
Size A3	Document Number PM8350B CTRL&GND		Rev P0
Date: Thursday, September 15, 2022	Sheet 53	79	

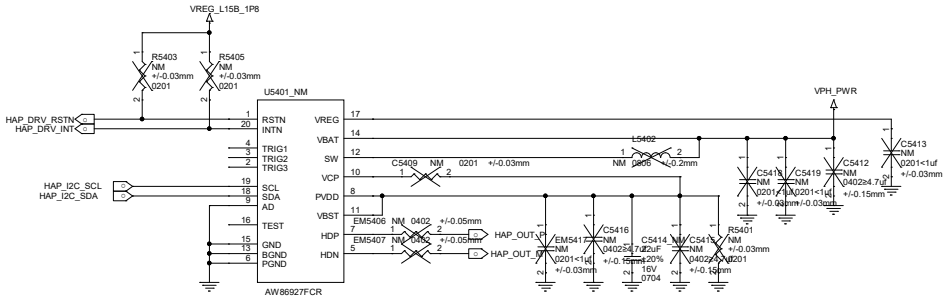

Title	M3_MAIN	
Size A2	Document Number PM8350B HAPTIC&OLED	Rev P0
Date: Thursday, September 15, 2022	Sheet 54 79	

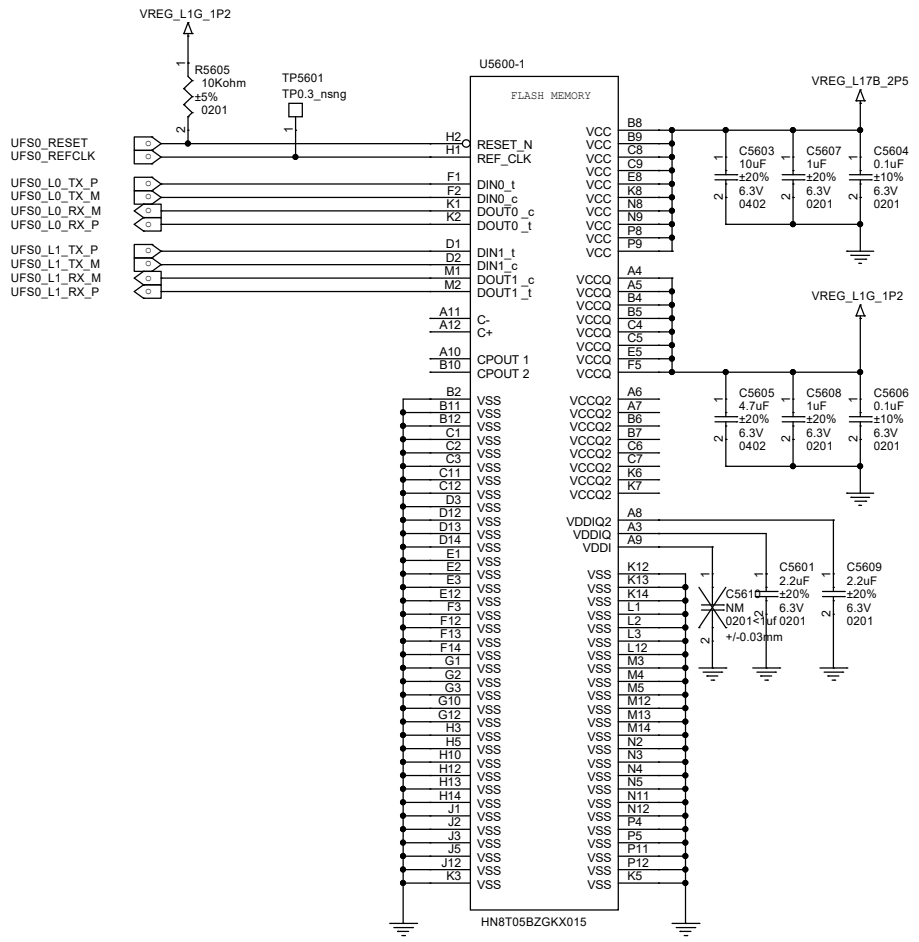

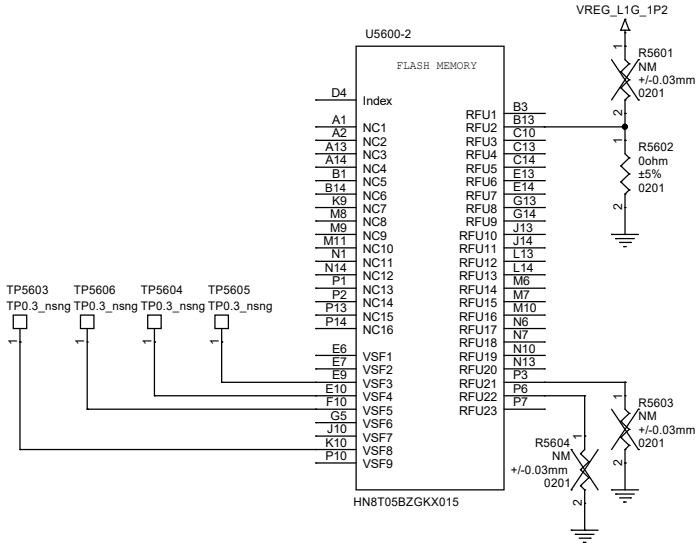

Title	M3_MAIN	
Size A3	Document Number SM8450 EVB	Rev P0
Date: Thursday, September 15, 2022	Sheet 56 of 79	

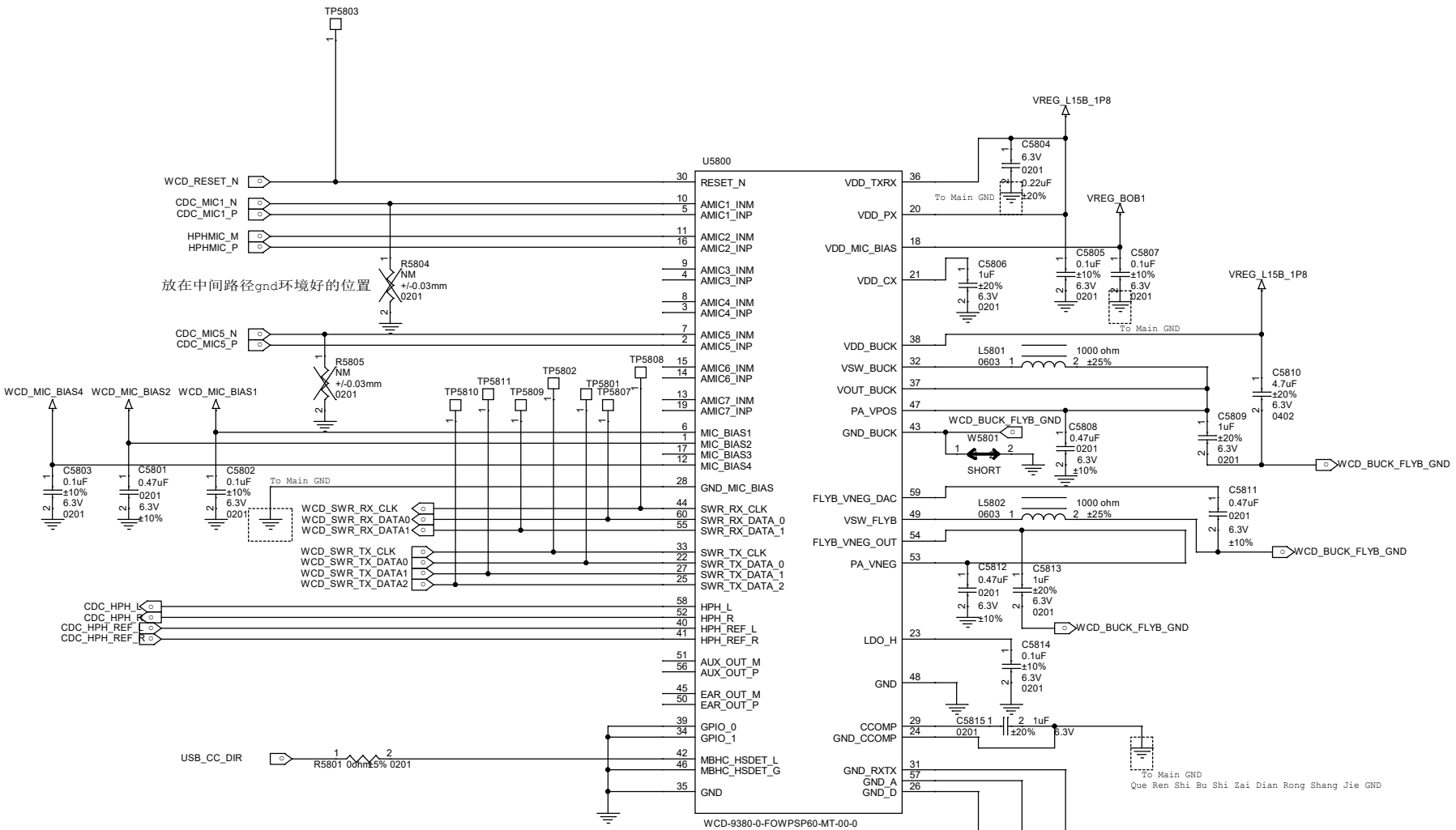

NOTE 1: ROUTE AN ISOLATED GROUND TRACE FROM CCOMP_REF TO THE CAP GROUND, THEN VIA TO THE MAIN GROUND PLANE
NOTE 2: PLACE VDD_BUCK CAP AS CLOSE TO CHIP EDGE AS POSSIBLE AND MINIMIZE LOOP INDUCTANCE
NOTE 3: USE SHORT AND WIDE TRACES FOR BUCK AND FLYBACK RELATED NETS
NOTE 4: ANALOG MIC INPUTS SHOULD BE ISOLATED WITH GROUND FROM NOISY OR SWITCHING SIGNALS AND SUPPLIES

Title	M3_MAIN	
Size A3	Document Number WCD9380	Rev P0
Date: Thursday, September 15, 2022	Sheet 58	79

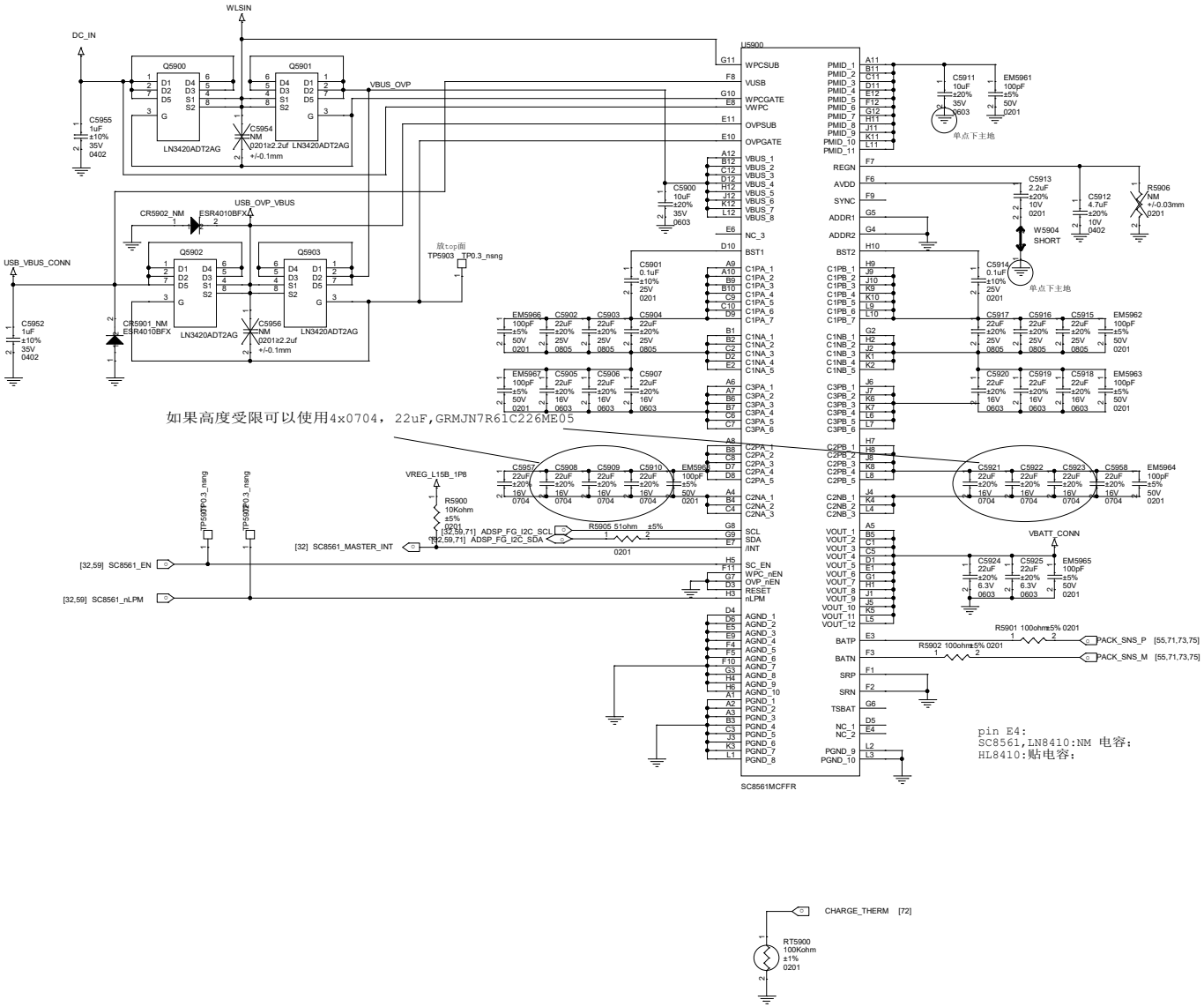

Title	M3_MAIN	
Size A2	Document Number SC8561	Rev P0
Date: Thursday, September 15, 2022	Sheet	

HEADSET

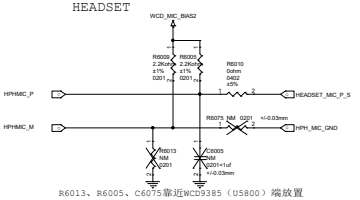

R6013、R6005、C6075靠近WCD9385（U5800）端放置

AUX MIC

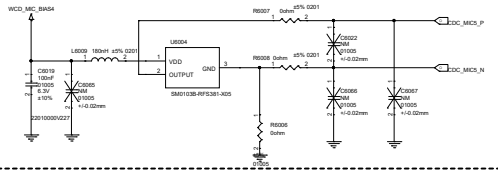

SPKR PA TOP

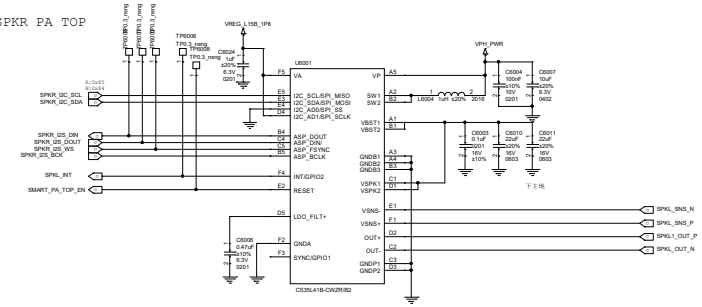

SPKR PA BOT

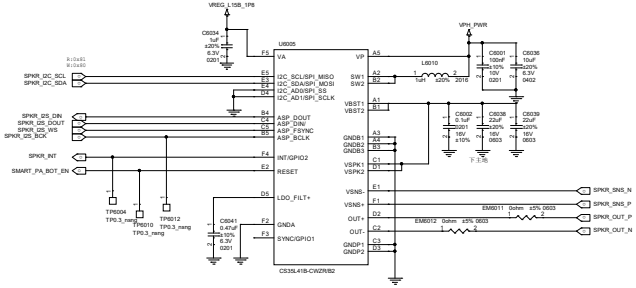

SPKR RECEIVER

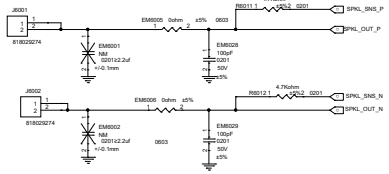

RECEIVER MOS

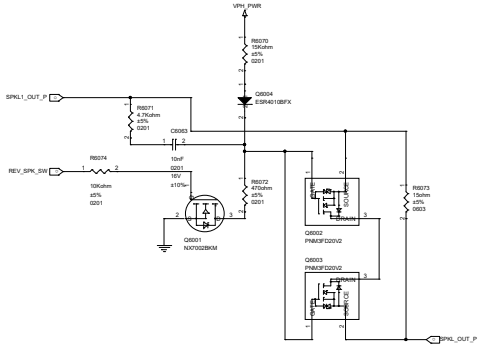

File	M3_MAIN		
Size	Document Number		Rev
A1	AUDIO		P6
Date:	Thursday, September 15, 2022	Sheet 69 of 83	

ALS

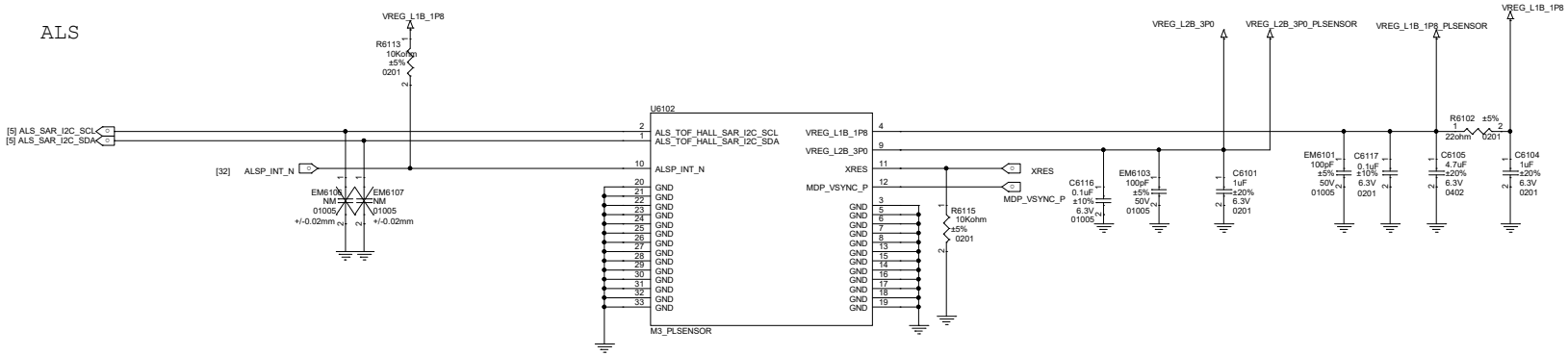

A+G

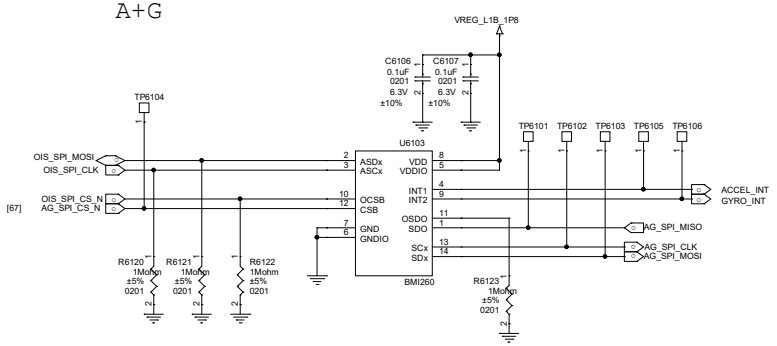

Sidekey

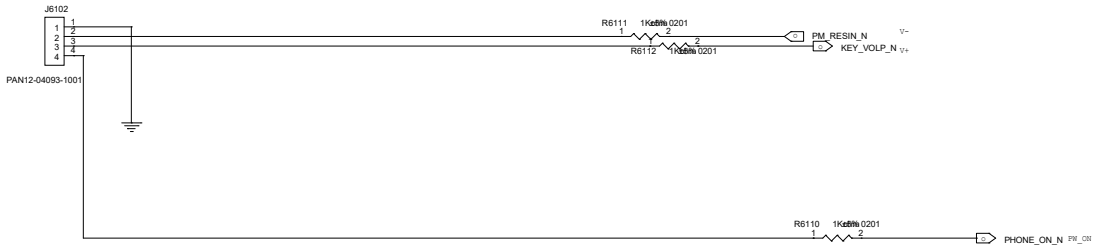

Title	M3_MAIN	
Size A2	Document Number SENSOR	Rev P0
Date: Thursday, September 15, 2022	Sheet	

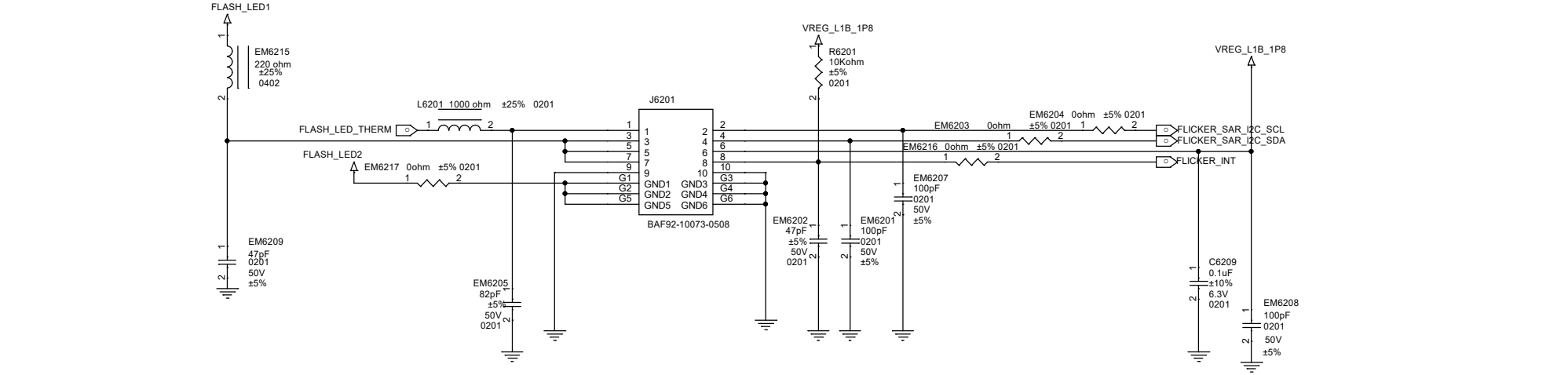

COMPASS

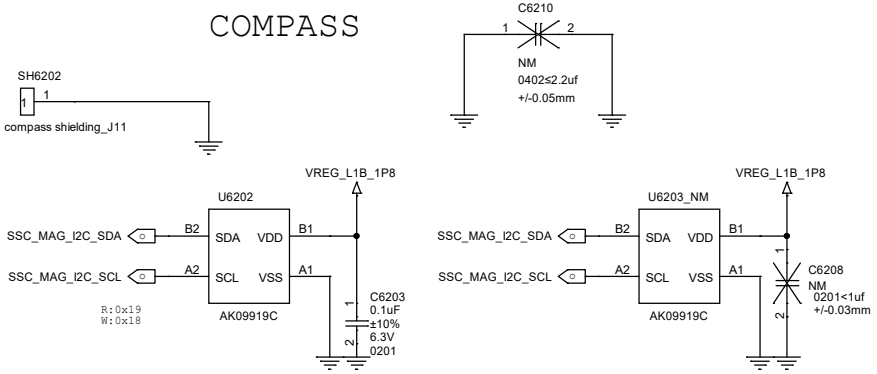

INFRARED

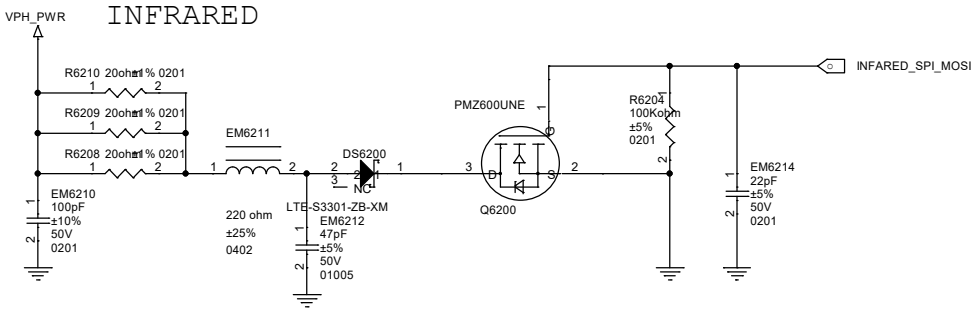

Title	M3_MAIN	
Size A3	Document Number SENSOR-2	Rev P0
Date: Thursday, September 15, 2022	Sheet	

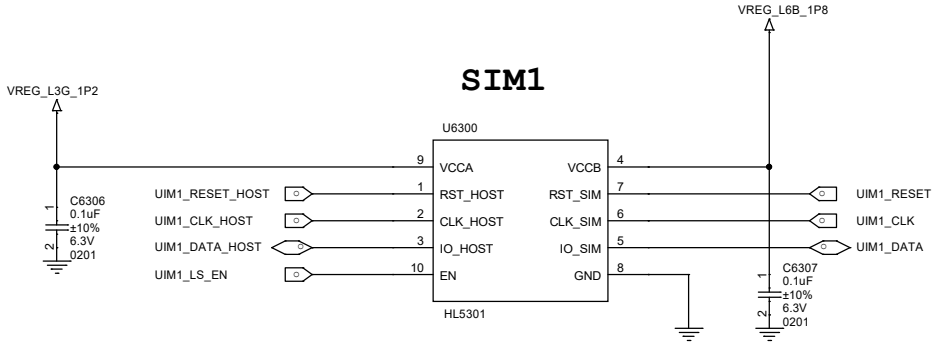

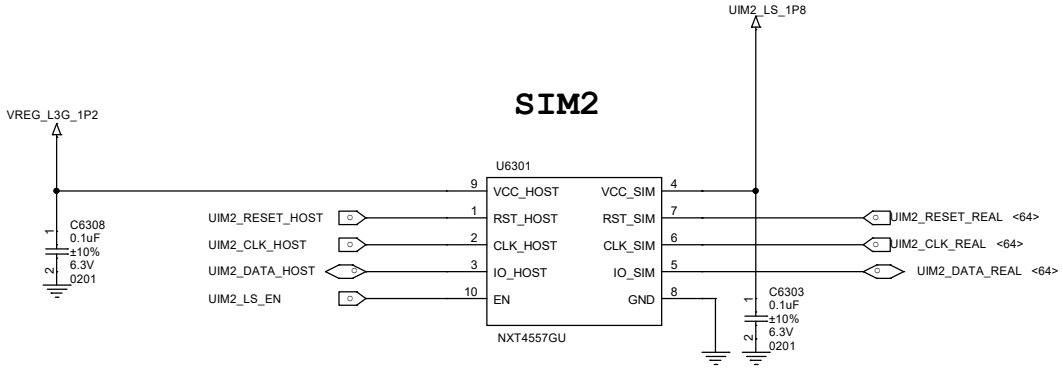

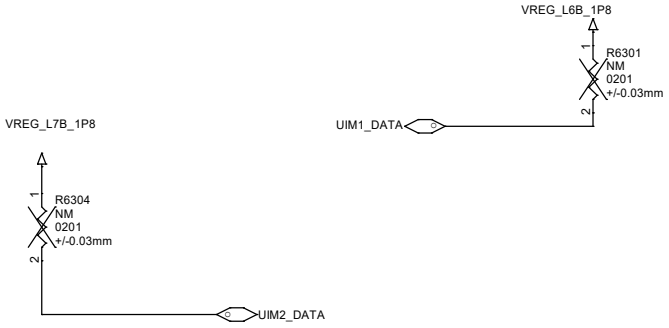

Title	M3_MAIN	
Size A3	Document Number SIM	Rev P0
Date: Thursday, September 15, 2022	Sheet 63 of 79	

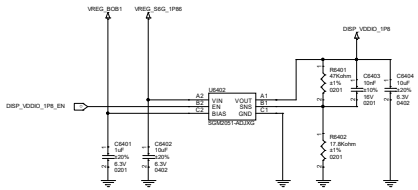

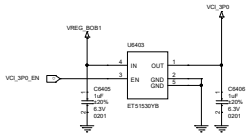

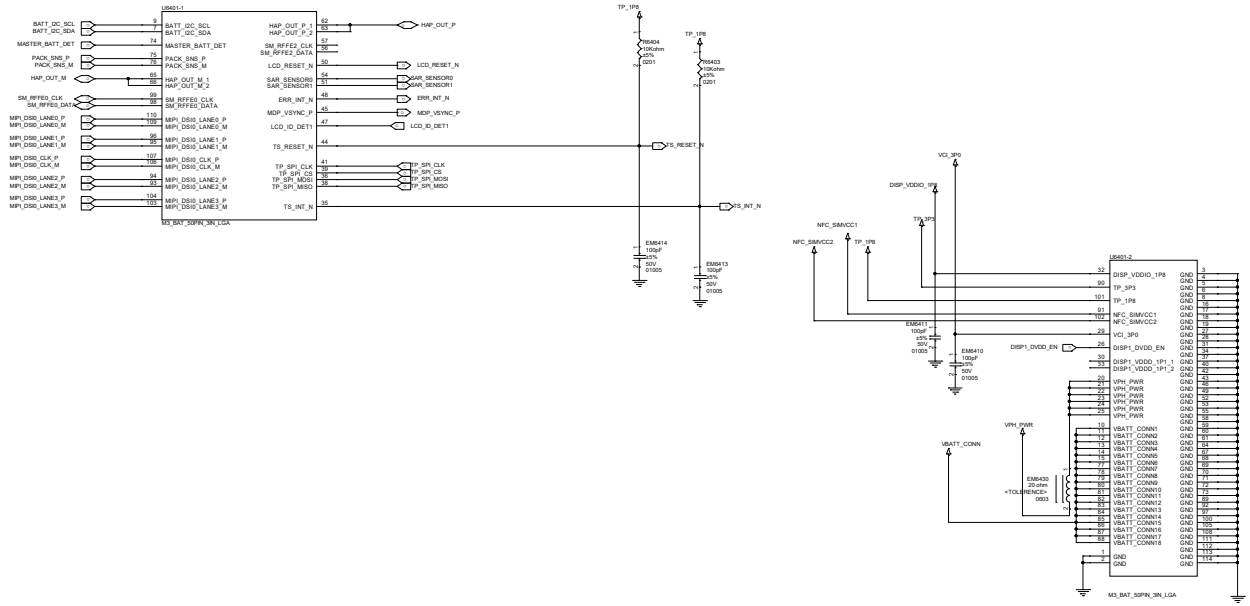

File:	M3_MAIN		
Size: A1	Document Number: BTB		Rev: P0
Date: Thursday, September 15, 2022		Sheet	

BTB

PM8350B---1S BATTERY ,low voltage VIBRATOR DRIVER
PM8350BH---1S BATTERY ,high voltage VIBRATOR DRIVER
PM8350BHS---2S BATTERY ,high voltage VIBRATOR DRIVER

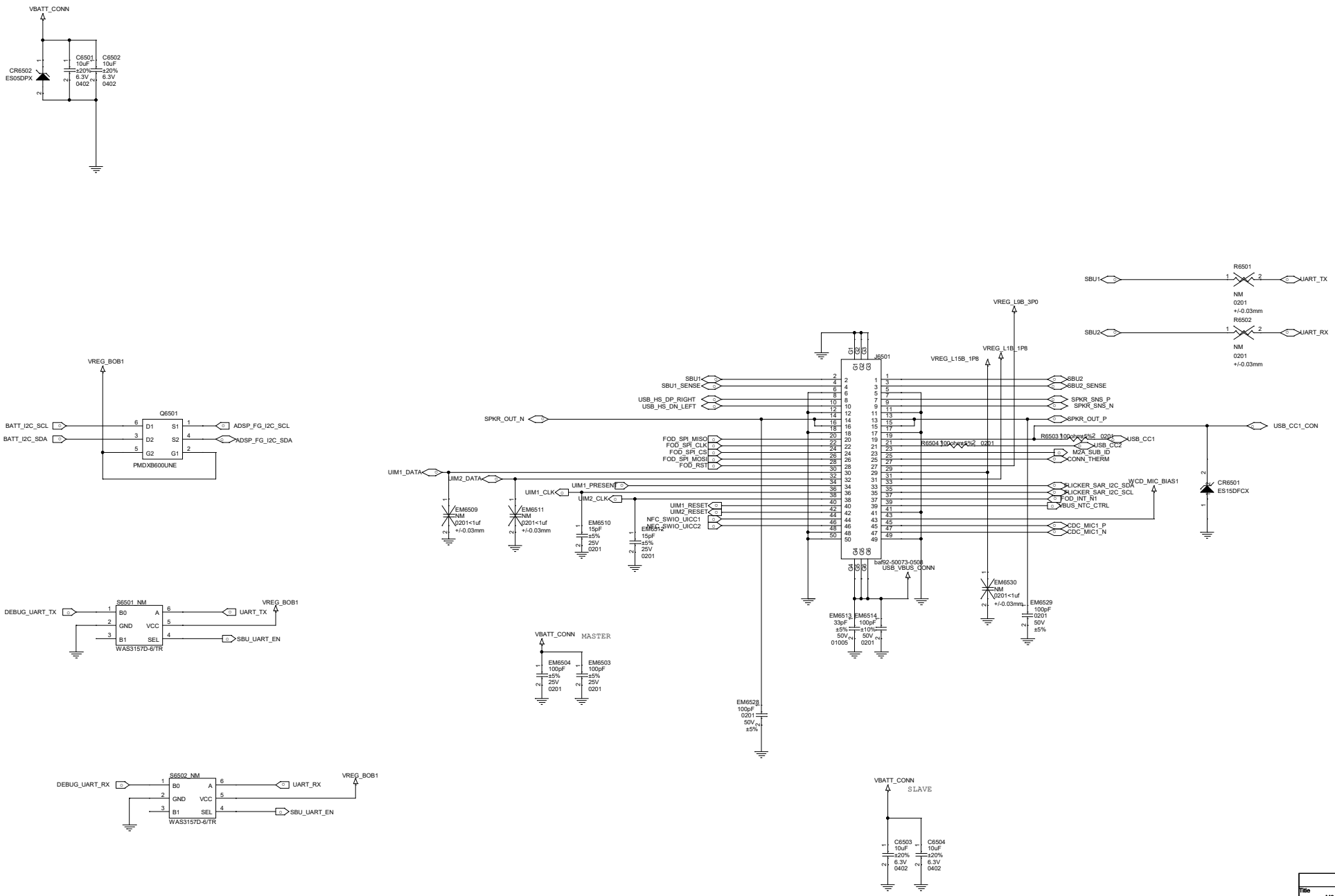

Title	M3_MAIN	
Size A2	Document Number PM8350B Charger	Rev P0
Date: Thursday, September 15, 2022	Sheet 65 of 79	

FRONT CAMERA (AON)

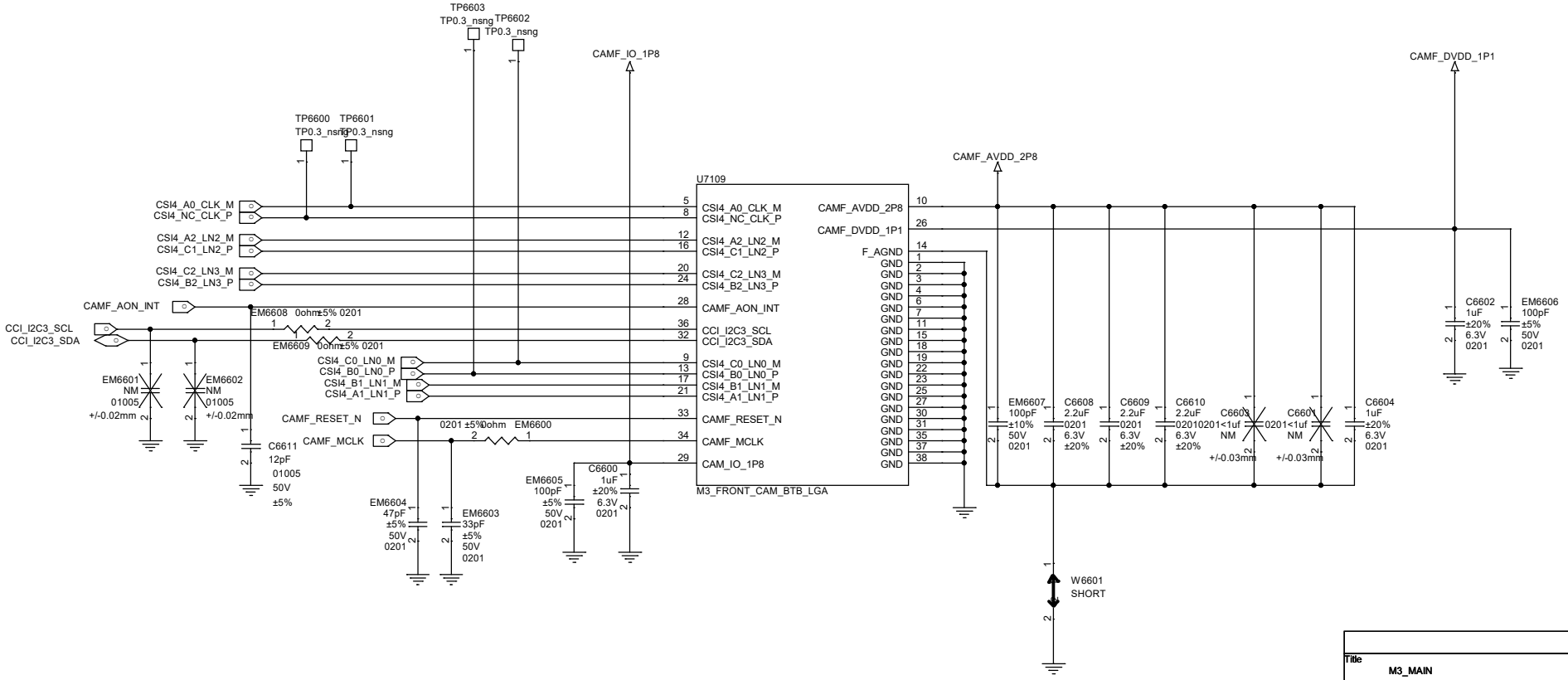

Title	M3_MAIN	
Size A3	Document Number CONTENT	Rev P0
Date: Thursday, September 15, 2022	Sheet 66 of 79	

WIDE_50M-IMX800(IMX866)

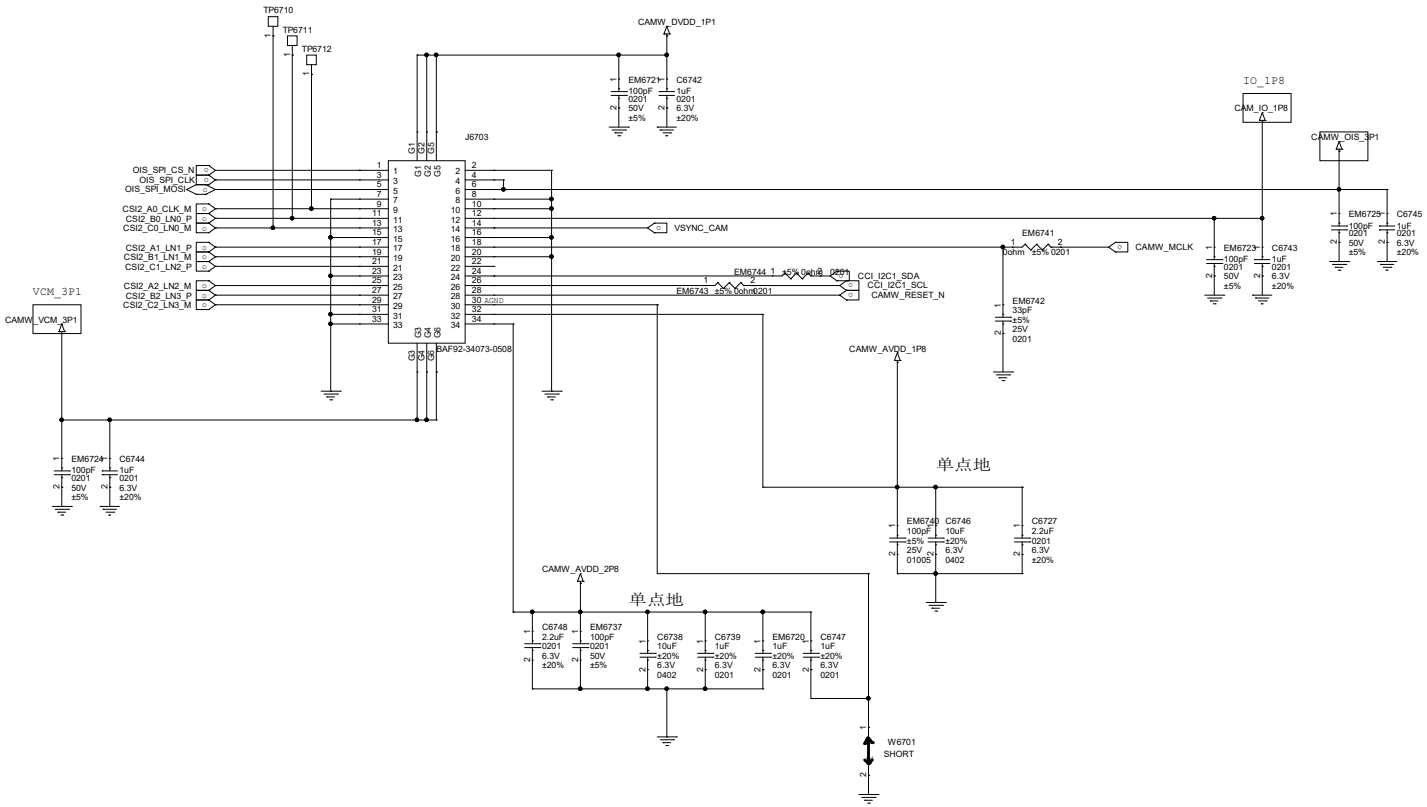

Title	M3_MAIN	
Size A2	Document Number WIDE&TELE CAMERA	Rev P0
Date: Thursday, September 15, 2022	Sheet 67 of 79	

ULTRA 50MP

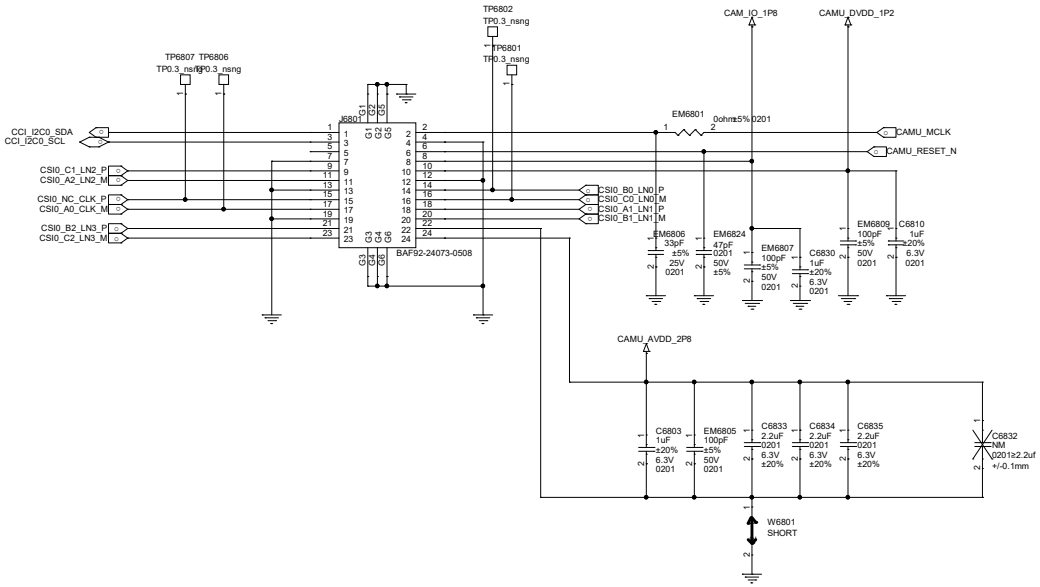

TELE 3X 12MP

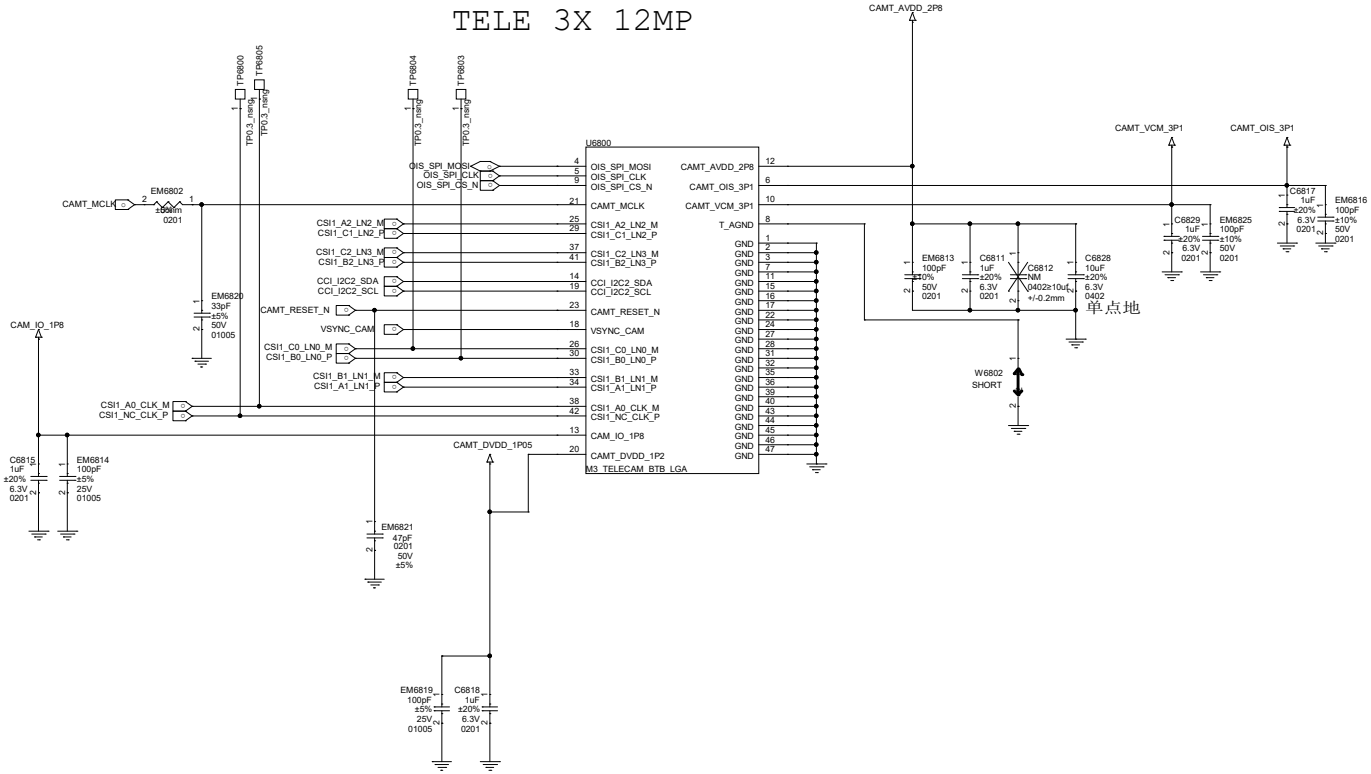

Title	M3_MAIN	
Size A2	Document Number ULTRA CAMERA	Rev P0
Date: Thursday, September 15, 2022	Sheet 68 79	

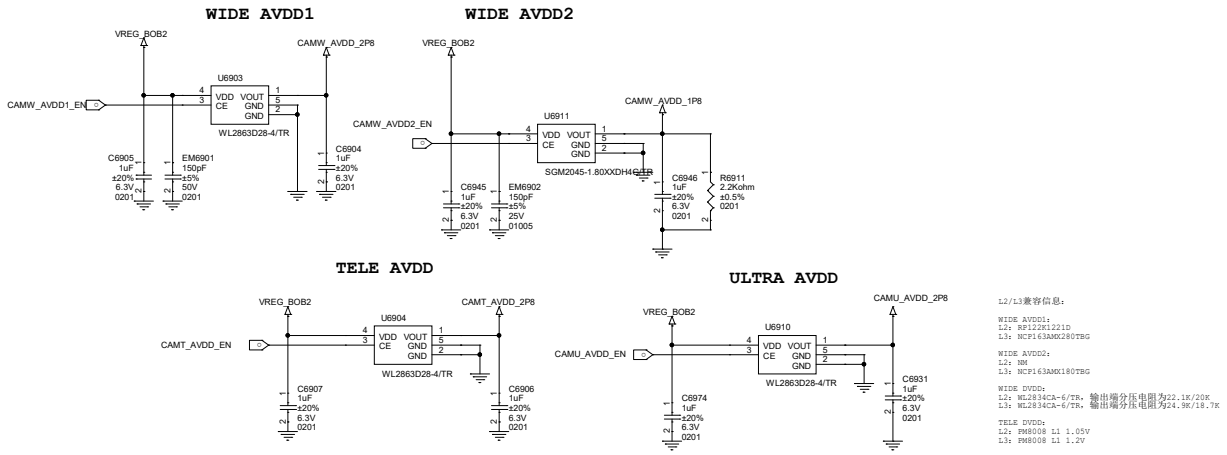

L2/L3兼容信息:

WIDE AVDD1:
L2: RF122K1221D
L3: NCP163AMX280TBG

WIDE AVDD2:
L2: NM
L3: NCP163AMX180TBG

WIDE DVDD:
L2: WL2834CA-6/TR. 输出端分压电阻为22.1K/20K
L3: WL2834CA-6/TR. 输出端分压电阻为24.9K/18.7K

TELE DVDD:
L2: PM8008 L1 1.05V
L3: PM8008 L1 1.2V

PM8010

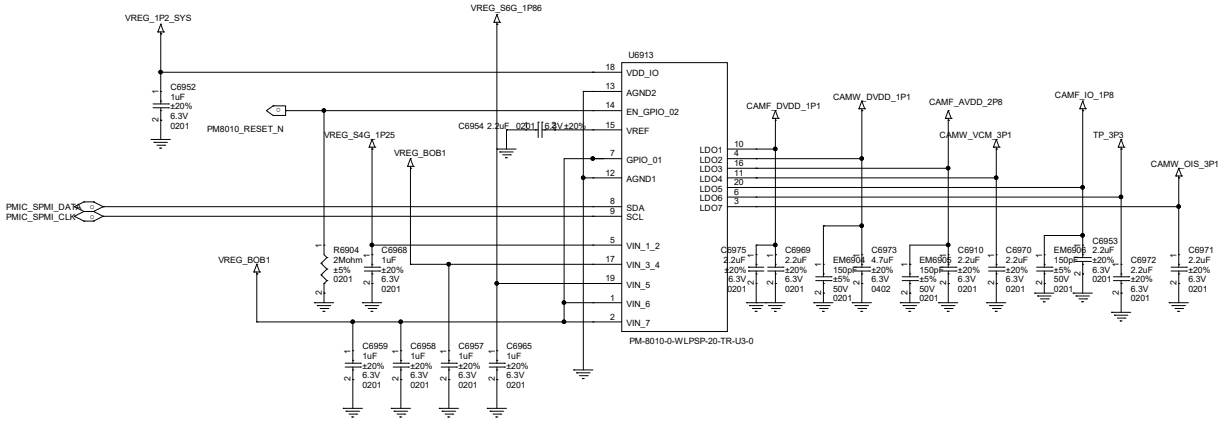

Title	M3_MAIN	
Size A2	Document Number PM8008 & CAMERA LDOs	Rev P0
Date: Thursday, September 15, 2022	Sheet 69	

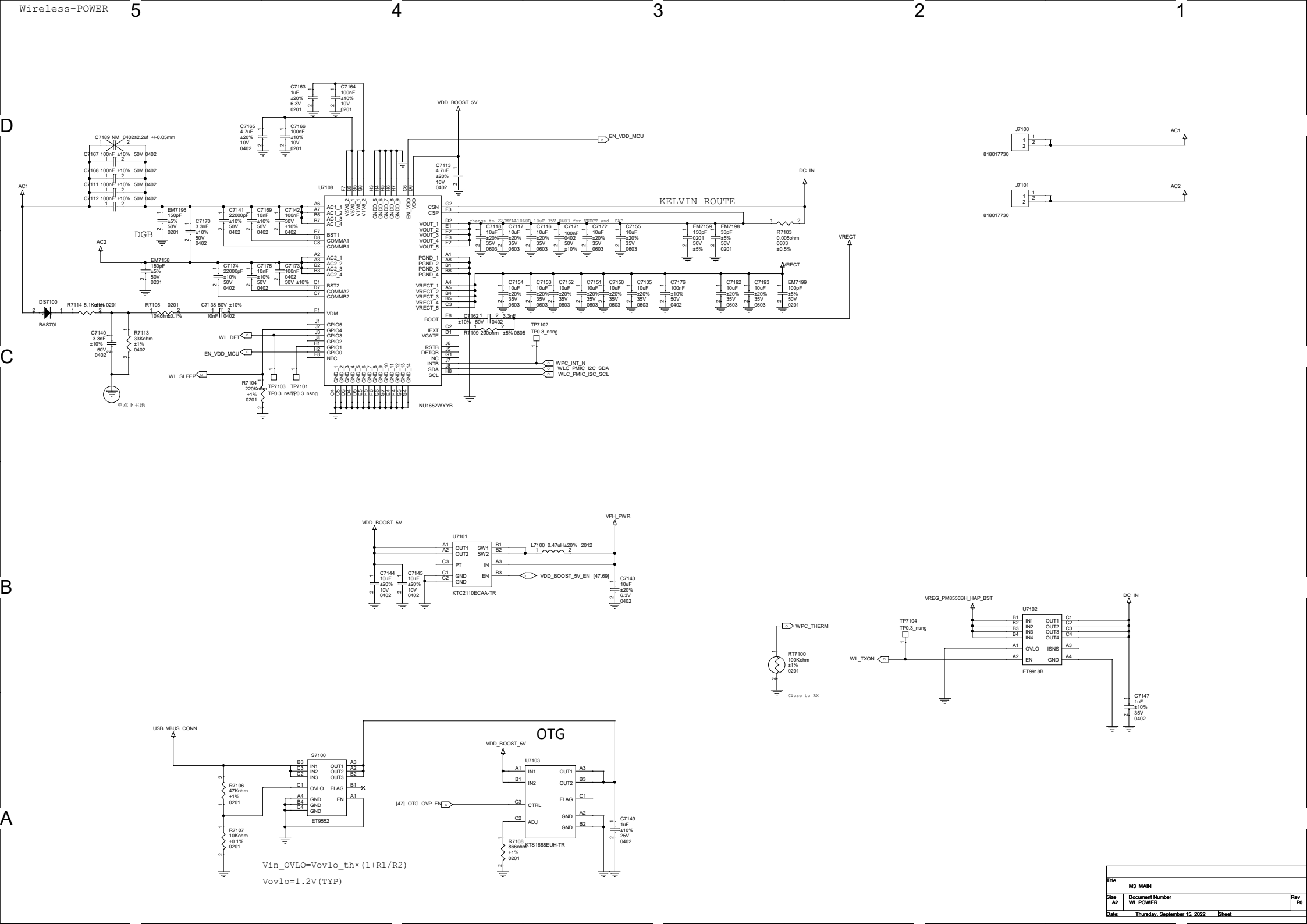
5
4
3
2
1
D
C
B
A
U108
NU1652WYYB
KELVIN ROUTE
DGB
VDD_BOOST_5V
EN_VDD_MCU
DC_IN
VRECT
AC1
AC2
J7100
J7101
818017730
DS7100
BAS70L
R7114 5.1Kohm ±1% 0201
R7105 10Kohm ±0.1% 0201
C7138 10nF 50V ±10% 0402
R7113 33Kohm ±1% 0402
C7140 3.3nF ±10% 50V 0402
单点下主地
WL_DET
EN_VDD_MCU
WL_SLEEP
R7104 220Kohm ±1% 0201
TP7103 TP0.3_nsng
TP7101 TP0.3_nsng
TP7102 TP0.3_nsng
WPC_INT_N
WLC_PMIC_I2C_SDA
WLC_PMIC_I2C_SCL
R7109 200ohm ±5% 0805
C7162 3.3nF ±10% 50V 0402
R7103 0.005ohm ±0.5% 0603
EM7199 100pF ±5% 50V 0201
U7101
KTC2110ECAA-TR
VPH_PWR
L7100 0.47uH±20% 2012
VDD_BOOST_5V_EN [47,69]
C7144 10uF ±20% 10V 0402
C7145 10uF ±20% 10V 0402
C7143 10uF ±20% 6.3V 0402
WPC_THERM
RT7100 100Kohm ±1% 0201
Close to RX
VREG_PM8550BH_HAP_BST
U7102
ET9918B
TP7104 TP0.3_nsng
WL_TXON
C7147 1uF ±10% 35V 0402
USB_VBUS_CONN
S7100
ET9552
R7106 47Kohm ±1% 0201
R7107 10Kohm ±0.1% 0201
OTG
U7103
KTS1688EUH-TR
[47] OTG_OVP_EN
R7108 866ohm ±1% 0201
C7149 1uF ±10% 25V 0402
Vin_OVLO=Vovlo_th×(1+R1/R2)
Vovlo=1.2V(TYP)
Title
M3_MAIN
Size
A2
Document Number
WL POWER
Rev
P0
Date:
Thursday, September 15, 2022
Sheet

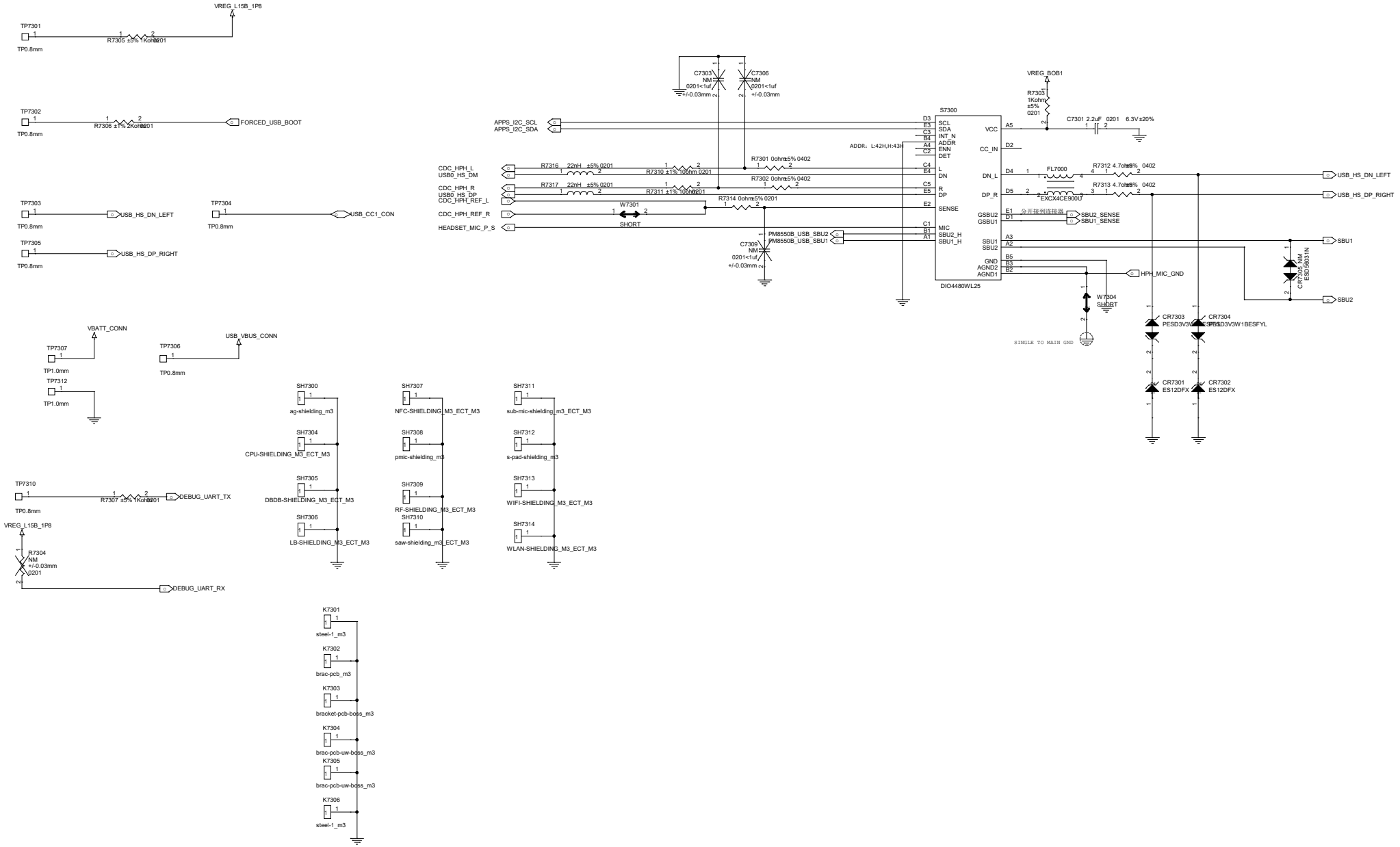

Title	M3_MAIN		
Size A2	Document Number TEST POINT		Rev P0
Date: Thursday, September 15, 2022	Sheet 73 of		

Title	M3_MAIN
Size: A	Document Number: LGA PIN
Rev	P0
Date:	Thursday, September 15, 2022
Sheet	76 of 79